CHAPTER 22

SUBDIVISION AND LAND DEVELOPMENT[1]

PART 1

GENERAL

§22-100. Title
§22-101. Enactment.
§22-102. Contents
§22-103. Purposes
§22-104. Interpretation
§22-105. Jurisdiction
§22-106. Conflict/Liability

PART 2

DEFINITIONS

§22-200. Language Interpretations
§22-201. Meanings of Words and Terms
§22-202. Definition of Terms

PART 3

(RESERVED)

PART 4

PLAN PROCESSING PROCEDURES

§22-400. Applicability
§22-401. General Procedures
§22-402. Sketch Plan and ERSAP Submission and Review Procedure
§22-403. Preliminary Plan Submission and Review Procedure
§22-404. Final Plan Submission and Review Procedure
§22-405. Minor Plan Submission and Review Procedure
§22-406. Recording of Plans

---

[1] Editor's Note: This Chapter was codified and reenacted as part of the adoption of the Code of the Township of New Britain by Ord. 2007-04-01, 4/26/2007.

PART 5

PLAN REQUIREMENTS

§22-500. Applicability
§22-501. Sketch Plan Requirements
§22-502. Preliminary Plan Requirements
§22-503. Final Plan Requirements
§22-504. Minor Plan Requirements
§22-505. Community Impact Assessment Report

PART 6

(RESERVED)

PART 7

DESIGN STANDARDS AND PUBLIC IMPROVEMENTS

§22-700. Application
§22-701. General Standards
§22-702. Ordinance and Plan Conformance
§22-703. Blocks and Lots
§22-704. Easements
§22-705. Streets
§22-706. Curbs and Sidewalks
§22-707. Pedestrian Walkways, Recreational Trails, and Bicycle Lanes
§22-708. Parking Areas
§22-709. Off-Street Loading Facilities
§22-710. Fire Hydrants, Fire Lanes, and Emergency Access
§22-711. Grading, and Erosion and Sedimentation Control
§22-712. Stormwater Management
§22-713. Landscape Planting
§22-714. Lighting
§22-715. Park and Recreation Land
§22-716. Survey Monuments and Markers
§22-717. Utilities
§22-718. Public Water Supply
§22-719. Private On-Lot Water Supply
§22-720. Public Sanitary Sewer System
§22-721. Private On-Lot Sewage Disposal System

PART 8

MOBILE HOME REGULATIONS

§22-800. Declaration of Legislative Intent
§22-801. General Applicability
§22-802. Site Design
§22-803. Common Open Space and Facilities
§22-804. Buffering and Landscaping
§22-805. Utilities
§22-806. Permits, Licenses, Fees and Inspections
§22-807. Additional Requirements

PART 9

ADMINISTRATION, FEES, AND ENFORCEMENT

§22-900. General Administration
§22-901. Records
§22-902. Fees and Costs
§22-903. Required Improvements
§22-904. Construction of Facilities
§22-905. General Standards
§22-906. Enforcement

PART 10

AMENDMENTS AND VALIDITY

§22-1000. Amendment Procedures
§22-1001. Referral to Planning Commission
§22-1002. Forwarding Amendments to County Planning Commission
§22-1003. Validity and Severability

Appendix A
Appendix B
Appendix C
Appendix D
Appendix E

PART 1

GENERAL

§22-100. Title.

This Chapter shall be known and shall be cited as the "New Britain Township Subdivision and Land Development Ordinance of 2002, as amended."

(Ord. 2002-05-02, 5/20/2002, §100)

§22-101. Enactment.

This Chapter has been enacted in conformance with the provisions of the Pennsylvania Municipalities Planning Code, Act No. 247 of 1968 as reenacted and amended by Act No. 170 of 1988, Act No. 209 of 1990, Act No. 131 of 1992, Act No. 38 of 1994, Act No. 165 of 1996, Act No. 97 of 1998, Act No. 10 of 1999, Act No. 67 of 2000, and Act No. 68 of 2000; Act No. 167, the Stormwater Management Act of 1978; and the authority granted to the Township under the Second Class Township Code. This Chapter has been adopted by the Board on May 20, 2002.

(Ord. 2002-05-02, 5/20/2002, §101)

§22-102. Contents.

This Chapter contains regulations that include, but are not limited to, plan submission and processing requirements; certification as to accuracy of plans; design standards; engineering standards; provisions for the development and public dedication of various physical improvements, including land for recreation purposes; standards for the development of mobile home parks.

(Ord. 2002-05-02, 5/20/2002, §102)

§22-103. Purposes.

The following are the purposes of this Chapter:

A. To protect and provide for the public health, safety and welfare of New Britain Township.

B. To guide the future growth and development of New Britain Township in accordance with the adopted Comprehensive Plan, Zoning Ordinance [Chapter 27], Sewage Facilities Plan and Open Space Plan.

C. To provide for adequate light, air quality and privacy, to secure safety from fire, flood and other danger and to prevent overcrowding of land and congestion of population.

D. To protect the character and economic viability of all parts of the Township.

E. To encourage the orderly and beneficial development of the community through appropriate growth management techniques, including assuring the appropriate timing and sequencing of development and requiring the necessary infrastructure.

F. To protect and conserve the value of land throughout the Township and the value of buildings and improvements upon the land.

G. To guide public policy in order to provide adequate and efficient transportation, water supply, sewage facilities, storm drainage facilities, recreation areas and other public improvements and facilities.

H. To ensure that any lands offered for dedication or otherwise reserved for use as public or common grounds shall be of suitable location, size, configuration and character for their designated uses.

I. To provide the beneficial relationship between the uses of land and buildings and the circulation of traffic throughout the Township, in particular to avoid vehicular congestion and hazards, and to promote pedestrian circulation appropriate to the various uses of land and buildings.

J. To ensure that public facilities and services are available concurrent with development and will have a sufficient capacity to serve the proposed subdivision and/or land development.

K. To secure economic local government expenditures and ensure that the Township will be required to bear no more than its fair share of the costs of providing the services required by the development.

L. To ensure the proper legal descriptions, public records and monumentation of subdivided and/or developed land.

M. To encourage and promote economic efficiencies and ingenuity in the layout and design of subdivisions and/or land developments, including provisions authorizing the Township to modify the requirements of this Chapter in accordance with concepts and practices consistent with the modern and evolving, generally accepted principles of site planning and land development.

N. To provide equitable and timely handling of subdivision and/or land development proposals by providing uniform procedures and standards.

O. To encourage subdivision and/or land development in accordance with principles and practices which conserve energy, both during and after construction and which encourage the use of alternative energy sources by the layout of the proposal and the location of buildings.

P. To prevent the pollution of air, surface water and groundwater and protect the quality of land.

Q. To protect environmentally critical areas and to encourage the use of natural resources throughout the Township in order to preserve the integrity and beauty of the community and the value of the land.

R. To accomplish coordinated development that is compatible with the existing developed portions of the Township.

S. To provide for the buffering of certain types of land uses to minimize their impact upon their surroundings.

(Ord. 2002-05-02, 5/20/2002, §103)

§22-104. Interpretation.

1. The provisions of this Chapter shall be the minimum requirements to meet the above-stated purposes.

2. Where the provisions of this Chapter impose greater restrictions than those of any other statute, ordinance or regulations, including those of the Township, State and Federal governments and other agencies, then the provisions of this Chapter shall prevail.

3. Where the provisions of any other statute, ordinance or regulations impose greater restrictions than those of this Chapter, the provisions of such statute, ordinance, or regulations shall take precedence.

4. No portion of this Chapter grants any form of relief from any State or Federal statute unless specifically granted by such statute.

(Ord. 2002-05-02, 5/20/2002, §104)

§22-105. Jurisdiction.

The Board shall, with the recommendation of the Township Planning Commission, review and act on all subdivision and/or land development plans as defined in this Chapter for projects that are located in whole or in part in the Township.

A. Subdivision and Land Development. No subdivision and/or land development of any lot, tract or parcel of land as defined in Part 2 shall be made and no street, road, alley, sanitary sewer, stormwater facility, water main, gas, oil or electric line or other improvements in connection with the subdivision and/or land development shall be laid out, constructed or dedicated for public use or for the common use of occupants of an abutting building, except in accordance with this Chapter.

B. Sale of Lots, Issuance of Building Permits or Erection of Buildings. No lot in a subdivision and/or land development may be sold and no permit to erect, alter or repair any structure upon land in a subdivision and/or land development will be issued unless and until the following conditions have been met:

(1) A subdivision and/or land development plan has been approved by the Township and has been recorded by the Bucks County Recorder of Deeds according to this Chapter; and

(2) The required improvements in connection with the subdivision and/or land development have been either constructed or guaranteed for construction in the form of security as approved by the Board upon the advice of the Township Engineer and Solicitor, in accordance with the laws of the Commonwealth.

C. Condominiums. No provision of this Chapter shall be construed to prohibit condominium ownership as permitted by Uniform Condominium Act.

D. Restrictions of Record. There shall be no subdivision of any lot which has been restricted from further subdivision by a note or restriction of a plan or deed recorded at the office of the Bucks County Recorder of Deeds.

(Ord. 2002-05-02, 5/20/2002, §105)

§22-106. Conflict/Liability.

1. Conflict with Public and Private Provisions.

A. Public Provisions. Where any provisions of this Chapter impose restrictions different from those imposed by any other provision of this Chapter or any other ordinance, rule, or regulation, other provision of law, whether local, State or federal, whichever provisions are more restrictive or impose higher standards, shall control.

B. Private Provisions. This Chapter is not intended to abrogate any easement, covenant or any other private agreement or restriction, provided that where the provisions of this Chapter are more restrictive or impose higher standards or regulations, than such easement, covenant or other private agree-

ment or restriction, the requirements of this Chapter shall govern. Where the provisions of the easement, covenant or private agreement or restriction impose duties and obligations more restrictive, or higher standards than the requirements of these regulations, or the determinations of the Board of Supervisors in approving a subdivision or land development, or in enforcing this Chapter, and such private provisions are not inconsistent with this Chapter or determinations thereunder, then such private provisions shall be operative and supplemental to these regulations and determinations.

2. Municipal Liability.

A. The grant of a permit or approval of a plan for any proposed subdivision and/or land development to be located within any identified floodplain area or district shall not constitute a representation guarantee or warranty of any kind by New Britain Township or by any official or employee of the Township of the practicality or safety of the proposed use and shall create no liability upon New Britain Township, its officials or employees.

B. All applicants are advised to review the terms and provisions of this Chapter in advance of any application or to engage competent engineering or other professional advice to review the terms and conditions of this Chapter prior to application of any plan of subdivision and/or land development.

(Ord. 2002-05-02, 5/20/2002, §106)

PART 2

DEFINITIONS

§22-200. Language Interpretations.

For purposes of this Chapter, certain words shall be interpreted as follows:

A. Words used in the present tense shall also include the future.

B. The singular number shall include the plural and the plural shall include the singular.

C. The phrase "used for" shall include "arranged for," "designed for," "intended for," "maintained for" and/or "occupied for."

D. The word "person" shall include an individual, firm, corporation, partnership, company, incorporated association, government entity, and/or any other similar entity. Such entities shall include a trustee, receiver, assignee, or similar representative.

E. The word "lot" shall include the words "plot" or "parcel" or "tract."

F. The words "include" or "including" shall not limit the term to the specified examples, but are intended to extend the meaning to all other instances of like kind and character.

G. The word "building" shall include structure or dwelling, and shall always be construed as if followed by the words "or part thereof."

H. The word "may" is permissive, and the words "shall" and "will" are always mandatory.

I. The words "he" or "she" or "they" are to be used interchangeably with the word "person."

J. The word "street" shall include "road," "highway," "avenue," "boulevard," "lane" or "expressway."

K. The word "stream" shall include "watercourse," "creek" or "river."

L. The word "Board" shall mean "Board of Supervisors."

M. The word "Township" shall mean "New Britain Township."

N. The word "Commonwealth" shall mean "Commonwealth of Pennsylvania."

(Ord. 2002-05-02, 5/20/2002, §200)

§22-201. Meanings of Words and Terms

Words and terms used in this Chapter shall have the meanings given in this Chapter. Unless expressly stated otherwise, any pertinent word or term not a part of this listing, but vital to the interpretation of this Chapter, shall be construed to have one of the following meanings:

A. The legal definition of the word or term.

B. The meaning of the word or term as commonly accepted by practitioners, including civil engineers, surveyors, architects, landscape architects and/or planners.

C. The definition of the word or term as included in the Township Zoning Ordinance [Chapter 27].

(Ord. 2002-05-02, 5/20/2002, §201)

§22-202. Definitions of Terms.

ACCEPTED ENGINEERING STANDARDS — that which conforms to accepted principles, tests or standards of nationally recognized technical, scientific and/or engineering disciplines.

ACT 247 — the Municipalities Planning Code (MPC) of July 31, 1968, 53 P.S. §10101, et. seq., as amended.

ACT 537 — Sewage Facilities Act, 35 P.S. §750.1 et seq., as amended.

AGENT — any person legally authorized by an applicant to act on the applicant's behalf that while representing the applicant submits any plan to the Township for the purpose of obtaining plan approval.

AISLE — an access way by which vehicles ingress and egress parking spaces.

ALLEY — limited roads that provide secondary access to homes or businesses, provide off-street parking and/or are used by service vehicles.

ANCHORING — the fastening of any structure (including a mobile home) to the ground (including to a mobile home pad) in order to prevent upset or damage due to wind, erosion, flooding or other natural forces.

APPLICANT — a landowner, equitable landowner or executor, including his or her heirs, successors and assigns who has filed an application for subdivision and/or land development for the purpose of obtaining approval.

APPLICATION FOR SUBDIVISION AND/OR LAND DEVELOPMENT — an application, whether preliminary or final, required to be filed and reviewed for approval prior to start of construction or development including, but not limited to, an application for a building permit, a subdivision plan or a land development plan.

ARCHITECT — a professional architect registered by the Commonwealth of Pennsylvania.

ARCHITECT, LANDSCAPE — a professional landscape architect registered by the Commonwealth of Pennsylvania.

AUTHORITY — a public organization created pursuant to the Municipal Authorities Act of 1945 (P.L. 292, No. 164) as amended.

BASIN, DETENTION — an impoundment basin designed to temporarily hold stormwater or surface runoff and discharge the stormwater or runoff at a controlled rate.

BASIN, RETENTION — a basin designed to retain stormwater runoff so that a permanent pool is created.

BERM — an earthen mound intended to partially or fully screen site elements between properties or uses.

BEST MANAGEMENT PRACTICES (BMPs) — methods, measures or procedures used to minimize accelerated erosion and sedimentation to protect, maintain, reclaim and restore the quality of water.

BICYCLE LANE — a lane designated and delineated by signs, markings, striping and/or barriers, for the preferential or exclusive use by bicycles.

BICYCLE TRAIL — a path constructed for use by bicycles, which may be on a separate surface from that used for motor vehicles.

BLOCK — an area bounded by streets or by streets and natural or man-made features such as municipal boundary lines, railroads, public parks, watercourses, etc.

BOARD — the elected governing body of New Britain Township.

BOND — any form of surety in an amount and form approved by the Board.

BUFFER — an area of trees, shrubs, groundcover, fence(s), wall(s), berm(s) or a combination of elements designed to separate the uses of abutting land and to

buffer visual outlines of buildings, screen glare and noise and ease the transition between uses.

BUILDING — any structure, whether built conventionally or in a manner generally referred to as "Mobile," "Modular" or "Manufactured" and having a roof supported by columns or walls, temporarily or permanently located on the land and intended for the shelter, housing or enclosure of persons, animals, processes, equipment, goods or materials of any kind.

BUILDING, ACCESSORY — a subordinate building on the same lot as a principal building or use. Any portion of a principal building used or intended to be used for an accessory use is not an accessory building.

BUILDING ENVELOPE — the area of a lot where structures are permitted according to the Township Zoning Ordinance [Chapter 27].

BUILDING, PRINCIPAL — a building in which the principal use of the lot is conducted.

BUILDING SETBACK LINES — the rear line of the minimum front yard as defined by the Township Zoning Ordinance [Chapter 27].

CALIPER — the diameter of a tree trunk measured in inches, six inches above ground level for trees up to four inches in diameter and 12 inches above ground level for trees more than four inches in diameter.

CARTWAY — the portion of a street, alley, access drive or driveway, whether paved or unpaved, intended for vehicular use.

CLEAR SIGHT TRIANGLE — an area of unobstructed vision at street intersections defined by lines of sight between points at a given distance from the intersection of the street right-of-way lines.

COMPREHENSIVE PLAN — maps, charts and text duly adopted by the Board as the official Comprehensive Plan for the Township.

CONDOMINIUM — an ownership arrangement, portions of which are designated for separate ownership and the remainder of which is designated for restricted ownership solely by the owners of those portions.

CONDOMINIUM ASSOCIATION — the community association that administers and maintains the common property and common elements of a condominium.

CONSTRUCTION — the act of building, renovating, repairing, extending, expanding, altering or relocating a building or structure, including the placement of mobile homes.

CONTIGUOUS LOTS — lots where at least one boundary line of one lot touches a boundary line or lines of another lot.

CROSSWALK — a defined or marked pedestrian access way that traverses a street, road or parking area.

CULVERT — a structure under a road or pedestrian pathway designed to convey stormwater.

CURBLINE — a line formed by the face of the existing curb or in its absence, the outer edge of the shoulder, along which a curb would be otherwise located.

CUT — an excavation; the difference between a point on the original ground and a designated point of lower elevation on the final grade. Also, the material removed in an excavation.

DENSITY — the number of families, individuals, dwelling units, households or housing structures per unit of land.

DESIGN STORM — the magnitude of precipitation from a storm event measured in probability of occurrence (e.g., a fifty-year storm) and duration (e.g., twenty-four-hour storm) and used in computing stormwater management facilities.

DEVELOPER — any applicant, landowner, equitable landowner with the permission of the landowner, who makes or causes to be made a subdivision of land and/or land development.

DEVELOPMENT PLAN — the provisions for development, including a planned residential development, a plan of subdivision, all covenants relating to use, location and bulk of buildings and other structures, intensity of use or density of development, streets, and parking facilities, common open space, and public facilities. The phrase "provisions of the development plan" shall mean the written and graphic materials referred to in this definition.

DISTRICT — an area zoned in accordance with the Township Zoning Ordinance [Chapter 27].

DRAINAGE FACILITY — any drainage swale, culvert, basin, storm sewer or other natural or manmade feature of land that is specifically designed to detain or convey stormwater runoff.

DRIPLINE — an imaginary line on the ground around a tree that defines the limits of the tree canopy.

DRIVEWAY RELATED TERMS –

A. Driveway — A private ingress/egress between a public street and a residential lot.

B. Access Drive — Any nonresidential ingress/egress between a public street and a parking area within a lot.

DWELLING — a building containing one or more dwelling units.

DWELLING UNIT — any room or group of rooms located within a residential building that form a single, habitable unit with facilities used or intended to be used for living, sleeping, cooking and eating by one family.

EASEMENT — a right-of-way or other right, granted by a property owner for the use of a designated part of his or her property, for public, quasi-public or private purposes, including utilities, drainage facilities, natural or scenic area protection or access.

EMERGENCY ACCESS — a designated and identified ingress/egress for emergency apparatus.

ENGINEER — a licensed, professional civil engineer, registered by the Commonwealth of Pennsylvania.

EQUIVALENT DWELLING UNIT OR EDU — a standardized measurement of the consumption, use or generation (such as water or sewage flows) equivalent to 350 gallons per day (gpd).

EROSION — the detachment and movement of soil or rock fragments or the wearing away of the land surface, by water, wind, ice, gravity or other natural processes.

ESCROW — financial security deposited with the Township or financial institution to secure the promise to perform some future act.

EXCAVATION — any act by which natural materials are dug into, cut, quarried, uncovered, removed, displaced, relocated or bulldozed, as well as the conditions resulting therefrom.

FAMILY — a group of individuals not necessarily related by blood, marriage, adoption or guardianship, living together in a dwelling unit or an individual living in a dwelling unit as a single housekeeping unit.

FILL — any act, by which natural materials are placed, pushed, dumped, pulled, transported or moved to a new location above the natural surface of the ground or on top of the stripped surface, as well as the conditions resulting therefrom. Also, the difference in elevation between a point on the original ground and a designated point of higher elevation on the final ground elevation.

FINANCIAL SECURITY — a letter of credit or cash escrow provided by the applicant to secure its promises regarding improvements associated with an approved subdivision and/or land development.

FIRE LANE — an emergency access that is an unobstructed, paved or improved surface area defined by pavement markings and signs and designed to provide access for fire-fighting equipment.

FLOODPLAIN RELATED TERMS:

A. Base Flood — The flood that has been selected to serve as the basis upon which the floodplain management provisions of this and other ordinances have been prepared. For the purposes of this Chapter, it shall be the one-hundred-year flood as referenced in the most current Flood Insurance Study and delineated on the most current Flood Insurance Rate Map of the Federal Insurance Administration.

B. FEMA and FIA — The Federal Emergency Management Agency and the Federal Insurance Administration who have jurisdiction over the National Flood Insurance Program and its related studies and regulations.

C. Flood — A temporary condition of partial or complete inundation of water on normally dry land areas.

D. Flood Insurance Study — The examination and determination of flood hazards by the FIA. The flood elevations contained in this study are used for floodplain management purposes as related to this and other ordinances.

E. Floodplain — A relatively flat or low land area adjoining a watercourse, which is subject to partial or complete inundation of water during a one-hundred-year flood, or any area subject to the unusual and rapid accumulation of surface water from any source. Also referred to as flood-prone area.

F. Floodplain Management — The application of a program or activities that may consist of both corrective and preventive measures for reducing flood damages.

G. One-hundred-Year Flood — A flood that has one chance in 100 or a 1% chance of being equaled or exceeded in any one year. For the purposes of this Chapter, the one-hundred-year flood (base flood) as defined by the most current Federal Insurance Administration in the Flood Insurance Study.

FREEBOARD — the difference between the design flow elevation through the emergency spillway and the top of berm elevation.

FRONTAGE — that side of a lot abutting a street or right-of-way.

GARAGE — a building or parking structure, or part thereof, used or intended to be used for the parking and storage of vehicles.

GRADE — the slope of a street, parcel of land, utility line, pipe, etc., specified in a percentage.

GROUND COVER — low growing plant materials set firmly in the ground to provide continuous plant cover of the ground surface that may include lawn, ivy and other low plant materials. Non-plant ground cover may include bark or wood chips, gravel, or stone, etc., provided they are maintained as a continuous, pervious cover.

GROUNDWATER — natural, underground water supply.

HOMEOWNERS ASSOCIATION — a community association, other than a condominium association, that is organized in a development in which individual owners share common interests and responsibilities for costs and upkeep of common open space or facilities.

IMPERVIOUS SURFACE — exterior surfaces which do not absorb water including all buildings, parking areas, driveways, roads, sidewalks, swimming pools and any area in concrete, asphalt, stone and similar materials. Also includes other areas determined to be imperious by the Township Engineer.

IMPROVEMENTS — buildings for public use or quasi-public use, streets, parking areas curbs, gutters, sidewalks and other pedestrian facilities, streetlights, signs, water and sewer mains, stormwater management systems, utilities, recreation facilities, open space, shade trees, buffer or screen plantings and all other additions to land that are required by this Chapter and the Township Zoning Ordinance [Chapter 27] or otherwise necessary to result in a complete subdivision and/or land development.

LAKE OR POND — a natural or artificial body of water that retains water year round.

LAND DEVELOPMENT — any of the following activities:

A. The improvement of one lot or two or more contiguous lots for any purpose involving:

(1) A group of two or more residential or nonresidential buildings, whether proposed initially or cumulatively, or a single nonresidential building on a lot or lots regardless of the number of occupants or tenure; or

(2) The division or allocation of land or space, whether initially or cumulatively, between or among two or more existing or prospective occu-

pants by means of, or for the purpose of streets, common areas, leaseholds, condominiums, building groups or other features.

B. A subdivision of land.

LAND DEVELOPMENT, MINOR — the expansion of an existing building or parking area.

LANDOWNER — the legal or beneficial owner or owners of land, including the holder of an option or contract to purchase (whether or not such option or contract is subject to any condition), a lessee if he or she is authorized under the lease to exercise the rights of the landowner or other person having a proprietary interest in land.

LIGHTING RELATED TERMS:

A. Cutoff Fixture — An outdoor light fixture shielded or constructed in such a manner that no more than 2% of the total light emitted by the fixture is projected above the horizontal plane of the fixture.

B. Footcandle (fc) — A quantitative unit measuring the amount of light cast onto a given point, measured as one lumen per square foot.

C. Full Cutoff Fixture — An outdoor light fixture shielded or constructed in such a manner that it emits no light above the horizontal plane of the fixture.

D. Glare — The effect produced by a light source within the visual field that is sufficiently brighter than the level to which the eyes are adapted, to cause annoyance, discomfort or loss of visual performance and ability.

E. Illuminating Engineering Society of North America (IESNA) — A non-profit professional organization of lighting specialists that has established recommended design standards for various lighting applications.

F. Light Source — The element of a lighting fixture that is the point of origin of the lumens emitted by the fixture.

G. Lumen — A quantitative unit measuring the amount of light emitted by a light source.

H. Photo Control — The device that turns the luminaire on at dusk and off at dawn. Also called photo eye, photocell and or control.

I. Semi-Cutoff Fixture — An outdoor light fixture shielded or constructed in such a manner that it emits no more than 5% of its light above the horizontal plane of the fixture and no more than 20% of its light 10° below the horizontal plane of the fixture.

J. Shielded — Fixtures that are shielded in such a manner that light emitted by the fixture, either directly from the lamp or indirectly from the fixture, are projected below a horizontal plane running through the lowest point on the fixture where light is emitted.

LOT — a designated parcel, tract, or area of land established by a plat or otherwise as permitted by law and to be used, developed, or built upon as a unit. Also, contiguous tracts, parcels or units of land held by a landowner and/or intended for use, development, lease or transfer of ownership and for which a single deed description is recorded or is intended to be recorded at the Office of the Recorder of Deeds for Bucks County.

LOT AREA — the area contained within the property lines of the individual parcels of land shown on a subdivision plan as required by this Chapter, excluding any area within an existing or designated future street right-of-way and any area required as open space under the Township Zoning Ordinance [Chapter 27] and the area of any existing or proposed easement.

LOT, CORNER — a lot that has an interior angle of less than 135° at the intersection of two street lines or at the corner of a street and an emergency access drive. A lot abutting upon a curved street or streets shall be considered a corner lot if the tangent to the curve at the points beginning within the lot or at the points of intersection of the side lot lines with the street lines intersect at an angle of less than 135°.

LOT, LANE — a lot that does not meet the required minimum lot width at the minimum front yard line, but has direct access to a public street through a narrow strip of land which is part of the same lot.

LOT LINE — any boundary line of a lot.

A. Front — The lot line separating a lot from a street right-of-way. Also called "Street Line."

B. Rear — Any lot line that is parallel to or within 45° of being parallel to a street line.

C. Side — Any lot line which is not a street line or rear yard line.

LOT LINE ADJUSTMENT — a change of a common lot line between two abutting lots from which an area of land is to be conveyed from one lot to the other, without creating an additional lot.

LOT, REVERSE FRONTAGE — a lot that extends between two streets of differing classifications, with vehicular access provided from the lesser street.

MARKER (LOT PIN) — a metal pin of at least 3/4 inches diameter and at least 30 inches in length, meeting the current Pennsylvania Society of Land Surveyors requirements.

MATURE TREE — a tree having a caliper of greater than 12 inches measured 14 inches above the ground or a height of 25 feet or greater.

MINOR SUBDIVISION — a subdivision of land that would divide one existing lot into two lots, both of which will comply with all requirements of the Zoning Ordinance [Chapter 27].

MOBILE HOME RELATED TERMS:

A. Mobile Home — A transportable single-family dwelling intended for permanent occupancy contained in one unit or in two or more units designed to be joined into one integral unit, capable of again being separated for repeated towing, which arrives at a site complete and ready for occupancy except for minor and incidental unpacking and assembly operations, constructed so that it may be used without a permanent foundation and built under U.S. HUD standards and not BOCA standards. A mobile home need not meet local building codes, but shall meet the standards of the U.S. Department of Housing and Urban Development, as indicated in the Structural Engineering Bulletin(s) which shall be provided to the township by the applicant.

B. Mobile Home Lot — A parcel of land in a mobile home park improved with the necessary utility connections and other appurtenances (accessory attachments) necessary for the placement thereon of a single-family mobile home.

C. Mobile Home Park — A parcel or contiguous parcels of land that has been so designated and improved that it contains two or more mobile home lots for the placement thereon of mobile homes.

D. Mobile Home Stand — That part of a mobile home lot that has been reserved and prepared for the placement of a mobile home.

MODULAR HOME — a single-family residence or multifamily dwelling intended for permanent occupancy which is not designed to be towed or transported after installation and made by assembling one or more factory-built three-dimensional sections into an integral living unit. The construction materials and specifications of a modular home shall conform to those of a conventionally built home.

MONUMENT — a permanent survey reference point consisting of concrete, with a metal dowel insert, having a top width of four inches, a bottom width of six inches, a depth of 24 inches.

MULTIFAMILY — three or more dwelling units within a building that are separated by only horizontal floors or by a combination of horizontal floors and vertical walls.

OFFICIAL MAP — a map adopted by the Board pursuant to Article IV of Act 247.

OFF-SITE — located outside the boundary lines of the lot that is being subdivided or developed.

OPEN SPACE — land used for recreation, agriculture, resource protection or amenity. Open space is freely accessible to all residents of a development, except in the case of deed-restricted private open space or agricultural lands, where access may be restricted.

A. Open Space, Common — A parcel or parcels of land, or an area of water, or a combination of land and water within a development site and designed and intended for the use or enjoyment of residents of a specific development, not including streets, off-street parking areas and areas set aside for public facilities.

B. Open Space, Public — Open space owned and maintained by a public agency for the use and enjoyment of the general public.

OUTDOOR STORAGE — the keeping or storing of any goods, material, merchandise, or vehicles in an unenclosed area in the same place for more than 24 hours.

PARKING SPACE — an area used for parking of one vehicle.

PEAK DISCHARGE — the maximum rate of flow of stormwater runoff at given point and time.

PEDESTRIAN WALKWAY — a pathway designed for pedestrians, and separated from any bicycles or motor vehicle lanes. Pedestrian walkways provide access through residential developments and open space, and connect to institutional, commercial, industrial, recreational facilities or other residential areas. Pedestrian walkways may also provide facilities for walking as a recreational or educational activity.

PENNSYLVANIA MUNICIPALITIES PLANNING CODE (MPC) — see Act 247.

PENNSYLVANIA SECOND CLASS TOWNSHIP CODE — Act of May 1, 1933 (P.L. 103, No. 69) reenacted and amended November 9, 1995 (P.L. 350, No. 60), as amended.

PERVIOUS SURFACE — any material that permits full or partial absorption of stormwater into previously unimproved land.

PLAN — a graphic representation of a proposal for subdivision and/or land development, including necessary written notes. Includes sketch plans, preliminary plans, final plans, minor plans, plans for Zoning Hearing Board variances and special exceptions and conditional use plans.

PLAN OF SUBSTITUTION — a plan that replaces the originally submitted plan.

PLAT — the map or plan of a subdivision and/or land development, whether preliminary or final.

PROFESSIONAL SERVICES AGREEMENT — a contract between an applicant and the Township whereby the applicant reimburses the Township for professional expenses as a result of an applicant's plan.

PUBLIC HEARING — a formal meeting held pursuant to public notice by the Board or Township Planning Commission, intended to inform or obtain public comment, prior to taking action in accordance with this Chapter.

PUBLIC MEETING — a forum held pursuant to notice under 65 Pa.C.S., Chapter 7 (relating to open meetings).

PUBLIC NOTICE — notice published once each week for two successive weeks in a newspaper of general circulation in the Township. Such notice shall state the time and place of the hearing and the particular nature of the matter to be considered at the hearing. The first publication shall be no more than 30 days and the second publication shall be no less than seven days from the date of the hearing.

RECREATION RELATED TERMS:

A. Active Recreation Area — Any land that is set aside for use as active recreation including, but not limited to, tennis, shuffle board, play field, playground and/or tot lot.

B. Passive Recreation Area — An area for outdoor recreational activities not considered active recreation. These include, but are not limited to, walking, picnicking, bird watching, arts and crafts, nature study, board games and other similar activities.

C. Recreation — Any activity, whether structured or not, in which individuals voluntarily engage during their leisure.

RELEASE RATE — the level of control of the post-development peak rate of runoff to be achieved for a particular site, expressed as a percentage of the predevelopment peak rate of runoff.

RESERVE STRIP — a parcel of land whose primary function is to separate a street from adjacent properties, while not being used or capable of being used as a

building lot, open space or recreation area or for legitimate environmental protection purposes.

RIGHT-OF-WAY — a strip of land over which rights are provided for various purposes including vehicular access and travel, storm drainage, and utilities. The land within a right-of-way shall not be included in the dimensions or areas of a lot.

RIGHT-OF-WAY LINE — a line that forms the boundaries of a right-of-way.

RIGHT-OF-WAY LINE, ULTIMATE — the dividing line between a lot and the outside limit of a street ultimate right-of-way. Also called a "Street Line".

RIGHT-OF-WAY, STREET — a right-of-way for street purposes.

RIGHT-OF-WAY, ULTIMATE — the street right-of-way projected as necessary for adequate handling of anticipated maximum traffic volumes, according to the Township Street Classification Map. The ultimate right-of-way is the legal right-of-way where it has been offered for dedication and accepted by the Township or other authority.

SEDIMENT — solid material, both mineral and organic, that is in suspension or has been moved from its site of origin by the forces of water, air or gravity.

SETBACK — the distance between a building and any lot line or other feature.

SETBACK LINE — the line that is required by this Chapter or the Township Zoning Ordinance [Chapter 27] to be a minimum distance from a property line or other feature.

SEWAGE FACILITIES PLAN — a comprehensive plan for the provision of adequate sewage facilities adopted by the Board and approved by the Pennsylvania Department of Environmental Protection. Also called "Act 537 Plan." See Act 537.

SEWAGE FACILITIES PLANNING MODULE — an application submitted to the Township and other agencies for the purposes of revising the Township's Sewage Facilities Plan.

SEWAGE RELATED TERMS:

A. Sewage — Any substance that contains any of the waste products or other discharge from the bodies of human beings or animals and any noxious or deleterious substances being harmful or inimical to public health or to animal or aquatic life or to the use of water for domestic supply or for recreation or which constitutes pollution under the Act of June 22, 1987, (P.L. 1987, 394), known as the "Clean Streams Law," as amended.

B. Sanitary Sewer — A pipe that conveys sewage, and into which storm, surface and/or ground waters are not permitted.

C. Public Sanitary Sewer System — A sewer system and treatment facility owned, operated or maintained by a municipality or municipal authority approved by the Pennsylvania Department of Environmental Protection under a permit issued pursuant to the Clean Streams Law, 35 P.S. 691.1, et seq., as hereafter amended, supplemented, modified or reenacted by the General Assembly of Pennsylvania. Public sewers shall also include capped sewers.

D. Individual On-Lot Sewage Disposal System — A system of pipes, tanks or other facilities serving one dwelling unit and collecting, treating and disposing of sewage into the soil or into waters of the Commonwealth.

E. Community On-Lot Sewage System — A system of pipes, tanks or other facilities serving two or more dwelling units and collecting, treating and disposing of sewage into the soil or into waters of the Commonwealth.

F. Conventional Sewage System — A system employing the use of demonstrated on-lot sewage treatment and disposal technology in a manner specifically recognized by the regulations promulgated under Act 537.

G. Individual Residential Spray Irrigation System (IRSIS) — A nonconventional sewage disposal system permitted under Act 537, serving one dwelling unit, which treats and disposes of sewage using a system of pipes, treatment tanks and soil renovation through spray irrigation.

H. Small Flow Treatment Facility (SFTF) — A non-conventional sewage disposal system permitted under Act 537, serving one dwelling unit, which treats and disposes of sewage flows not greater than 2,000 gallons per day for final disposal to a watercourse.

I. Replacement Area — A portion of a lot that is deed-restricted and sized to allow the installation of an individual sewage disposal system and is reserved in the event that originally installed system fails.

SIGHT DISTANCE — the required length of roadway visible to the driver of a passenger vehicle at any given point on the roadway when the view is unobstructed by traffic, as regulated by Pennsylvania Code Title 67, Chapter 441 as amended.

SITE — a parcel or parcels of land intended to have one or more buildings or intended to be subdivided into one or more lots.

SITES OF HISTORIC, GEOLOGIC OR BOTANIC INTEREST — areas that have been included in comprehensive plans, studies or surveys and have significant value to the community worthy of preservation, as determined by the Board.

SLOPE — the face of an embankment or cut section. Any ground whose surface makes an angle with the plane of the horizon. Slopes are usually expressed in a percentage or ratio of horizontal distance as compared to vertical distance.

SOILS, FLOODPLAIN (ALLUVIAL) — areas subject to periodic flooding and listed in the Soil Survey of Bucks and Philadelphia Counties.

SOIL SURVEY — The Soil Survey of Bucks and Philadelphia Counties, Pennsylvania, 1975, prepared by the Soil Conservation Service of the United States Department of Agriculture, as amended.

SPECIMEN TREE — any tree with a caliper that is 75% or more of the record tree of the same species in the Commonwealth.

STORM SEWER — a pipe that conveys stormwater runoff.

STORMWATER MANAGEMENT — the control and management of stormwater to minimize the detrimental effects of surface water runoff.

STORMWATER RUNOFF — the surface water discharge of a given watershed after a rain event that does not enter the soil, but runs off the surface of the land.

STREET — a public or private right-of-way serving primarily as a means of vehicular and pedestrian access, which may also be used for utilities and/or stormwater control. A "street" includes all the land between the street lines. Streets are further classified as follows:

A. Arterial — A street that may have multi through lanes, which serves large volumes of traffic having relatively long trip lengths.

B. Major Collectors — A street that provides access to abutting properties and connects neighboring communities, which serves to distribute traffic to lower classified streets, with limited access to properties.

C. Minor Collector — A street that provides access to abutting properties and connects neighboring communities, which serves to distribute traffic to lower classified streets, with more emphasis on access to properties.

D. Local Street — A street used primarily as the principal means of access to adjacent properties, having relatively short trip lengths.

E. Single Access Loop Street — A street that does not terminate in a cul-de-sac, but loops back to intersect with itself in a "P" configuration.

F. Through Street — A street that has more than one point of intersection with any other street, as contrasted with a cul-de-sac or loop street, which has only one point of intersection with another street.

G. Cul-de-Sac Street — A street with a single means of ingress and egress that is permanently closed at one end, with a left side turnaround configuration.

STREET CLASSIFICATION MAP — a plan showing existing streets located within the Township according to their functional street classification.

STREET LINE — the dividing line between a lot and a street. Also called "Ultimate Right-of-Way Line" or "Ultimate Right-of-Way."

STRUCTURE — any manmade object having an ascertainable stationary location on or in land or water, whether or not affixed to the land.

SUBDIVISION — the division or redivision of a lot by any means into two or more lots, including changes in existing lot lines for the purpose, whether immediate or future, of lease, partition by the court for distribution to heirs or devisees, transfer of ownership or building or lot development.

SURVEY — the process of precisely ascertaining the area, dimensions and location of a piece of land. Also, the process of determining characteristics of persons, land, objects, buildings or structures by sampling, census, interviews, observations or other methods.

SURVEYOR — a licensed, professional land surveyor, registered by the Commonwealth of Pennsylvania.

SWALE — a depression in the ground that conveys stormwater runoff.

TOPSOIL — soils which normally are fertile, ordinarily rich in organic matter or humus debris and usually darker and richer than subsoil.

TOWNSHIP OFFICIALS — the officials of New Britain Township, according to the Second Class Township Code.

TRANSPORTATION SYSTEM INVENTORY — a technical evaluation of the traffic and transportation impacts associated with a proposed subdivision and/or land development.

TRIP — a single or one-way vehicle movement to or from a lot or study area. "Trips" can be added together to calculate the total number of vehicles expected to enter or leave a specific land use or site over a designated period of time.

UTILITIES — those services customarily rendered by public utility corporations, municipalities or municipal authorities, including but not limited to electricity, gas, telephone, cable television, water, sewage, etc. Also includes the structures and appurtenances used in connection with the supplying of such services including, but not limited to, buildings, wires, pipes, poles, towers, etc.

UTILITY EASEMENT — the right-of-way acquired by a utility service provider or governmental agency to locate utilities.

WATERCOURSE — any natural or artificial stream, river, creek or canal in which water flows in a definite direction or course, either continuously or intermittently and has a definite channel, bed and banks and includes any area adjacent thereto subject to inundation by reason of overflow or flood water.

WATER SUPPLY –

A. Private Water Supply System – A system for supplying and distributing water to a single lot or dwelling unit.

B. Public Water Supply System – Any water supply and distribution system that is owned and managed by the Township, the Bucks County Water and Sewer Authority, North Wales Water Authority, North Penn Water Authority, or Philadelphia Suburban Water Company or other approved water purveyor, which services more than a single community or subdivision and may be interconnected with other water supply systems.

WETLAND — areas that are inundated or saturated by surface or groundwater at a frequency and duration sufficient to support, and that under normal circumstances do support, a prevalence of vegetation typically adapted for life in saturated soil conditions, including swamps, marshes, bogs and similar areas. The term includes but is not limited to wetland areas listed in the Pennsylvania State Water Plan, the United States Forest Service Wetlands Inventory of Pennsylvania, the Pennsylvania Coastal Zone Management Plan and/or a wetland area designated by a river basin commission. Wetlands shall be determined by current standards established by the United States Army Corps of Engineers and the Pennsylvania Department of Environmental Protection.

WOODLANDS (FOREST) AREA — areas or stands of 10 or more mature trees or land containing trees, with an average caliper of six inches, that form a continuous canopy covering an area of 1/4 acre or more.

YARD — an area unobstructed from the ground up except for permitted projections and plantings, on the same lot with a building, extending along a lot line or street line and inward to the building.

A. Yard, Front — A yard between a building and a street line and extending the entire length of the street line. In the case of a corner lot, the yards extending along all streets are front yards. In the case of a lot other than a corner lot that fronts on more than one street, the yards extending along all streets are front yards.

B. Yard, Rear — A yard between a building and a rear lot line and extending the entire length of the rear lot line.

C. Yard, Side — A yard between a building and a side lot line, extending from the front yard to the rear yard. In the case of a lot having no street frontage or a lot of odd shape, any yard that is not a front yard or a rear yard shall be considered a side yard.

ZONING ORDINANCE — the New Britain Township Zoning Ordinance [Chapter 27], as amended, as adopted by the Board.

(Ord. 2002-05-02, 5/20/2002, §201; as amended by Ord. 2007-04-01, 4/26/2007)

PART 3

(RESERVED)

PART 4

PLAN PROCESSING PROCEDURES

§22-400. Applicability.

Before any land is to be subdivided or developed, the applicant shall apply for and secure approval of the subdivision and/or land development plans in accordance with this Chapter.

(Ord. 2002-05-02, 5/20/2002, §400)

§22-401. General Procedures.

1. All applications for subdivision and/or land development shall be classified as Sketch Plans, Preliminary Plans, Final Plans or Minor Plans, as defined in this Chapter.

2. An application will not be deemed complete unless the applicant has paid all applicable filing fees and the plans conform to the plan requirements of this Chapter.

3. All plans shall be accompanied by a completed Township Subdivision and Land Development Application Form and Subdivision and Land Development Plan Submission Checklist (see Appendix).

4. Within the time period permitted by the MPC, the applicant may submit a plan of substitution, which replaces the originally submitted plan. A plan of substitution shall be permitted only before the Board officially acts on the originally submitted plan.

5. It is recommended that any applicant considering a subdivision and/or land development proposal meet with Township staff prior to making a formal plan submission.

6. Subdivision applications creating a single new building lot are not considered minor subdivisions and such applications are required to submit a completed plan submission as required by §§22-403 and 22-404 of this Chapter. Subdivision proposals creating a single new building lot must establish a plan for all required improvements under this Chapter in those cases where there is additional vacant land for future subdivision of additional lots.

7. All plan submissions shall include two compact discs (CDs) that include PDF copies of all the plan sheets, supporting documentation and any other application material included in this submission. [Ord. 2010-03-01]

8. Notification Requirements. The applicant for a subdivision or land development shall, with the submission of a preliminary plan, notify all surrounding property owners (minor subdivision–adjacent property owners and major subdivisions and land developments within 1,000 feet of the proposed development perimeter). The

notice shall state that a subdivision or land development plan has been filed for the property (indicate tax map parcel number) and shall state that the Township office will schedule the meetings at which the plans will be reviewed. The developer shall include in the notice the date the plan is scheduled for the initial Township Planning Commission meeting. The notice shall include a copy of the proposed development plan showing proposed lots and streets and perimeter roads. The plan shall be either 8½" x 11" or 11" x 17". The notification shall be sent within 5 days of the time the plans are submitted to the Township. The applicant shall submit an affidavit to the Township setting forth the list of the names and addresses to which notices have been sent and include the content of the notice. The affidavit shall be supplied by the applicant to the Township five days prior to the first meeting of the Planning Commission at which the plans are to be discussed. The applicant shall post the property at the time of preliminary plan submission. The sign must be readable, maximum size of 2' x 3' and state that the property is the subject of a subdivision or land development with New Britain Township, (215) 822-1391, for any questions. [Ord. 2010-03-01]

(Ord. 2002-05-02, 5/20/2002, §401; as amended by Ord. 2010-03-01, 3/22/2010, §I)

§22-402. Sketch Plan and ERSAP Submission and Review Procedure.

1. Purposes. The purposes served by a sketch plan are to inform the Township of an applicant's intent to subdivide and/or develop a property, and graphically show the concepts and extent of the proposal. A sketch plan allows the Township to provide guidance to an applicant so that overall layout and design issues can be resolved prior to preparation of preliminary plans. The preliminary plan approval process may then be able to proceed more efficiently. Sketch plans may also show how a tract of land may be further subdivided or developed in cases where only a portion of a property is currently under an active proposal.

2. Sketch plans shall have no legal standing with regard to any future plan approvals and shall be considered solely as a guide for future development.

3. Applicants are encouraged but not required to submit a sketch plan for any subdivision and/or land development proposal.

4. Sketch Plan Processing Procedures:

   A. The applicant shall make a request to the Township Zoning Office to be scheduled on a Planning Commission meeting agenda for an informal discussion of the sketch plan.

   B. The applicant shall appear at the scheduled meeting to explain the plan and to discuss issues identified by the Planning Commission. The applicant should be prepared to discuss significant issues including, but not limited to, land use proposed (residential, commercial, industrial, etc.), density or intensity of proposal; access to the subject site, including intersection locations and road

realignments; site plan design, including subdividing, roads, buildings, common areas, curbs, sidewalks and pedestrian walkways and open space.

C. The Township Planning Commission may make suggestions and recommendations to the applicant during the meeting at which the plan is discussed. Suggestions and/or recommendations shall be summarized in the minutes of the Township Planning Commission for reference by the applicant.

D. The applicant may request a review by the Township Engineer. If so, the applicant shall be required to execute a professional services agreement and post financial security to reimburse the Township for the costs of such review.

E. The applicant may present alternative sketch plans provided that appropriate agenda time has been scheduled in advance.

5. ERSAP Plan Requirements and Processing Procedures.

A. The applicant is required to submit an ERSAP (existing resource and site analysis plan) for residential subdivisions involving six or more new lots. For nonresidential projects, an ERSAP submission is required for all developments unless otherwise waived by the Board of Supervisors.

B. The ERSAP submission procedure is as follows:

(1) The applicant shall submit an ERSAP application to the Township zoning office.

(2) The application shall be accompanied by an aerial photograph of the property at a legible scale to show the extents of the tract as well as the surrounding area up to 1600 feet from the tract boundary.

(3) The application should also include a sketch of the proposed subdivision or development. Although the Township encourages the applicant to contact an engineering professional, sketch plans can be prepared by the applicant.

(4) Once the aerial photograph and sketch plan have been received, the zoning office shall coordinate a site visit with the applicant, Township staff and elected officials. The purpose of the visit is to familiarize officials with the property's existing conditions and special features, to identify potential site design issues, and to provide an informal opportunity to discuss site design concepts, including the general layout of a designated required open space (if applicable), potential locations for proposed buildings and street alignments, stormwater management concepts, and protection of resources (natural and historic). Comments made by the Township representatives or their staff and consultants shall be as only advisory and are not binding on either the Township or the applicant. It shall be understood by all parties that no formal

recommendations can be offered, and no official decisions can be made, at the site visit or during the sketch plan process.

(5) Following the site visit and prior to the first plan submission, the applicant shall meet with Township officials to discuss the findings of the site visit and to develop a mutual understanding on the general approach for subdividing and/or developing the property. At the discretion of the Township, this conference may be combined with or occur during the site visit.

[Ord. 2010-03-01]

(Ord. 2002-05-02, 5/20/2002, §402; as amended by Ord. 2010-03-01, 3/22/2010, §§II, III)

§22-403. Preliminary Plan Submission and Review Procedure.

1. The applicant shall submit the appropriate number of copies of the preliminary plan to the Township Zoning Office during normal business hours. The applicant shall also submit the appropriate number of copies of the preliminary plan to the outside agencies listed on the Land Development Plan Submission Checklist provided in the Appendix.

2. The application for approval of the preliminary plan shall be in accordance with the MPC.

3. Township Planning Commission Review and Recommendation.

   A. As part of its review of the preliminary plan, the Township Planning Commission shall consider the recommendations of the Township Engineer, Bucks County Planning Commission, other consultants and agencies.

   B. The Planning Commission shall determine whether the preliminary plan complies with the requirements, objectives and intent of this Chapter, the Township Zoning Ordinance [Chapter 27], the Township Comprehensive Plan and any other Township ordinance or official plan.

   C. The Planning Commission shall make one of the following recommendations to the Board in a written report or within the minutes of the Planning Commission meeting:

      (1) The applicant address plan deficiencies or unresolved planning issues with Township staff; or

      (2) The plan be approved with conditions and specifically list the conditions; or

      (3) The plan be approved; or

      (4) The plan be denied and specifically list the reasons for such a recommendation.

4. Board Action.

   A. Time Period. The Board shall act in accordance with the MPC. If the applicant has agreed in writing to an extension or a waiver of the time period, it shall begin upon the expiration date of the original acceptance date or the expiration date of subsequent time extension(s).

   B. County Planning Commission Report. The Board shall not act on an application until the Bucks County Planning Commission report of its recommendations is received, or until the expiration of 30 days from the date the

application was accepted for review by the County in accordance with the MPC.

C. Decision. The Board shall consider the preliminary plan application at one or more of its public meetings in accordance with the MPC. The preliminary plan shall comply in all respects with applicable Township ordinances and any variances that have been granted by the Zoning Hearing Board. Based on the recommendations of the Township Planning Commission, Township Engineer, Bucks County Planning Commission and other consultants or agencies, the Board shall do one of the following:

(1) Approval of Preliminary Plan. If the Board approves a preliminary plan, written notification shall be sent in accordance with the MPC.

(2) Approval of Preliminary Plan Subject to Conditions. If the Board approves a preliminary plan, conditioned upon the performance of any act or the obtaining of any other approval or permit by the applicant, the applicant shall be given the opportunity to accept or reject the conditions in accordance with the MPC.

(3) Denial of Preliminary Plan. If the Board denies approval of a preliminary plan, written notification shall be sent to the applicant in accordance with the MPC.

D. Written Notification. Written notification of the Board's decision shall be in accordance with the MPC.

E. Approval of the preliminary plan shall constitute conditional approval of the subdivision and/or land development as to the character and intensity, but shall not constitute approval of the final plan or authorize the sale of lots or construction of buildings.

5. The effective period of preliminary plan approval shall be in accordance with the MPC.

(Ord. 2002-05-02, 5/20/2002, §403)

§22-404. Final Plan Submission and Review Procedure.

1. The applicant shall submit the appropriate number of copies of the final plan to the Township Zoning Office during normal business hours. The applicant shall also submit the appropriate number of copies of the final plan to the outside agencies listed on the Land Development Plan Submission Checklist provided in the Appendix.

2. The application for approval of the final plan shall be in accordance with the MPC.

3. Township Planning Commission Review and Recommendation.

   A. As part of its review of the final plan, the Township Planning Commission shall consider the recommendations of the Township Engineer, Bucks County Planning Commission, other consultants and agencies.

   B. The Planning Commission shall determine whether the final plan complies with the requirements, objectives and intent of this Chapter, the Township Zoning Ordinance [Chapter 27], the Township Comprehensive Plan and any other Township ordinance or official plan.

   C. The Planning Commission shall make one of the following recommendations to the Board in a written report or within the minutes of the Planning Commission meeting:

      (1) The applicant address plan deficiencies or unresolved planning issues with Township staff; or

      (2) The plan be approved with conditions, and specifically list the conditions; or

      (3) The plan be approved; or

      (4) The plan be denied and specifically list the reasons for such a recommendation.

4. Board Action.

   A. Time Period. The Board shall act in accordance with the MPC. If the applicant has agreed in writing to an extension or a waiver of the time period, it shall begin upon the expiration date of the original acceptance date or the expiration date of subsequent time extension(s).

   B. County Planning Commission Report. The Board shall not act on an application until the Bucks County Planning Commission report of its recommendations is received, or until the expiration of 30 days from the date the application was accepted for review by the county in accordance with the MPC.

   C. Decision. The Board shall consider the final plan application at one or more of its public meetings in accordance with the MPC. The final plan shall conform to the approved preliminary plan, with recommended revisions (if any) and shall also comply in all respects with applicable Township ordinances and any variances or waivers that have been granted by the Zoning Hearing Board and/or Board. Based on the recommendations of the Township Planning Commission, Township Engineer, Bucks County Planning Commission, and other consultants or agencies, the Board shall do one of the following:

(1) Approval of Final Plan. If the Board approves a final plan, written notification shall be sent in accordance with the MPC.

(2) Approval of Final Plan Subject to Conditions. If the Board approves a final plan, conditioned upon the performance of any act or the obtaining of any other approval or permit by the applicant, the applicant shall be given the opportunity to accept or reject the conditions in accordance with the MPC.

(3) Denial of Final Plan. If the Board denies approval of a final plan, written notification shall be sent to the applicant in accordance with the MPC.

D. Written Notification. Written notification of the Board's decision shall be in accordance with the MPC.

E. Approval of the final plan shall not constitute approval of the record plans or authorize the sale of lots or construction of buildings.

5. The effective period of final plan approval shall be in accordance with the MPC.

(Ord. 2002-05-02, 5/20/2002, §404)

§22-405. Minor Plan Submission and Review Procedure.

1. Minor plans may be submitted and processed for only lot line adjustments and minor land developments, as defined in this Chapter.

2. Applications that qualify as minor plans may be submitted for concurrent preliminary and final plan approval, and shall comply with the final plan submission and review procedures and recording final plans.

3. The Board may require the standard preliminary plan and final plan submissions in place of a minor plan.

4. All minor subdivision plans and lot line changes shall be reviewed by the Planning Commission before appearing before the Board of Supervisors. [Ord. 2010-03-01]

(Ord. 2002-05-02, 5/20/2002, §405; as amended by Ord. 2010-03-01, 3/22/2010, §IV)

§22-406. Recording of Plans.

1. Record Plan Requirements. No final plan shall be recorded for any subdivision and/or land development until the applicant has completed the following requirements:

A. If the final plan is approved with a public sewer system, the applicant shall provide the Township with a copy of the approved sewer agreement, including

reservation of capacity with the Chalfont-New Britain Township Joint Sewage Authority.

B. If the final plan is approved with on-lot sewage disposal system(s), the applicant shall provide the Township with a permit from the Bucks County Department of Health for each proposed lot.

C. The applicant shall provide the Township with proof of approval from the Pennsylvania Department of Environmental Protection for the required sewage facilities planning module or planning module exemption.

D. If the final plan is approved with a public water supply system, the applicant shall provide the Township with a copy of the approved water agreement with the appropriate water authority.

E. The applicant shall obtain written approval from the Township Fire Marshal's Office.

F. If the final plan is approved with a private individual well(s), the applicant shall comply with the Township's well construction standards and permitting procedures.

G. The applicant shall submit copies of all necessary permits/approvals from the applicable regulatory agencies, authorities, or departments.

H. If the final plan is approved with public streetlights, the applicant shall submit a streetlight petition to the Township in accordance with the requirements of the MPC.

I. Legal descriptions for all proposed easements, rights-of-way, deed restricted areas, etc., shall be submitted to the Township Engineer for review. Upon the Township Engineer's approval, the Township Solicitor shall prepare the required documents including grants of easement, deeds of dedication, stormwater maintenance agreement, operation and maintenance agreement, etc.

J. The applicant shall execute the required financial security and development agreement(s) as prepared by the Township Solicitor, and shall post the required financial security with the Township. For minor subdivision and land developments, in lieu of preparing a financial security agreement, the Board of Supervisors may defer the improvements and posting of the financial security until building permit application provided a note is added to the plan and a separate unilateral declaration of covenants, restrictions and conditions is executed by the applicant to provide notice to future lot owners of the escrow requirement. [Ord. 2010-03-01]

K. The applicant shall have paid in full all Township-incurred legal, engineering, planning and administrative costs relative to the plan submission.

2. Submission Record Plans.

   A. Six paper copies of the final plan to be recorded shall be submitted directly to the Township Engineer for review and execution, prior to approval by the Board. The final plan shall bear the signature of the landowner(s) of record, notary public, the signature and seal of the registered professional engineer and surveyor responsible for the plans, and signature of an official of the Bucks County Planning Commission. [Ord. 2003-03-01]

   B. At the time of record plan submission, the applicant shall also submit to the Township Engineer:

      (1) Five complete paper sets (rolled) of the final plans for construction; and

      (2) One electronic copy of all drawings on CD ROM media in PC language in either DWG or DEF Vector format. The information on the electronic plan shall be the same in exact detail as the final plans to be recorded. In the event that electronic submission is not possible, the applicant may request preparation of an electronic plan by the Township Engineer. All expenses associated with preparation of the electronic plan by the Township Engineer shall be considered review expenses incurred by the Township on behalf of the applicant.

   C. Within 90 days following Board approval of the Record Plan, the Township Zoning Officer shall record all final plans at the Office of the Recorder of Deeds of Bucks County. The Township will notify the applicant when recorded copies of the plans are available to be picked up at the Township Zoning Office.

3. Effect of Recording. After a subdivision and/or land development has been duly recorded, the streets, utilities, parks and other public improvements shown thereon shall be considered to be a part of the official map of the Township. All streets, parks and other public improvements shall be deemed to be a private and the responsibility of the applicant until such time as the Township has accepted/approved by resolution the improvements, and the deeds of dedication have been recorded in the Office of the Recorder of Deeds of Bucks County.

(Ord. 2002-05-02, 5/20/2002, §406; as amended by Ord. 2010-03-01, 3/22/2010, §§V, VI)

PART 5

PLAN REQUIREMENTS

§22-500. Applicability.

1. The following requirements apply to all subdivision and/or land development plans, including sketch plans, preliminary plans, final plans and minor plans.

2. In addition to the following requirements, the applicant shall submit a completed Subdivision and Land Development Application Form and Subdivision and Land Development Plan Submission Checklist.

3. Any requests for modifications and/or waivers of any provisions of this Chapter shall be in accordance with §512.1 of the MPC, 53 P.S. §10512.1, as amended, and included in the plan submission as required by the Subdivision and Land Development Plan Submission Checklist.

(Ord. 2002-05-02, 5/20/2002, §500)

§22-501. Sketch Plan Requirements.

All sketch plans shall show as much of the following information as possible. Any additional information that the applicant believes will help explain the proposal should also be shown:

A. The entire tract boundary, total acreage and tax parcel numbers for all properties.

B. Existing easements, rights-of-way, required open space or any other restriction on the land.

C. Contour lines measured at vertical intervals of two feet, as determined by an onsite field survey or interpretation of U.S.G.S. maps.

D. Significant physical features such as floodplain, steep slopes, woodlands and existing structures.

E. Location map showing the relationship of the subject tract to the surrounding road network and major physical features, drawn at a scale not exceeding one inch equals 800 feet.

F. The zoning district(s) in which the property is located and any variances, special exceptions or conditional uses that are required or have been granted.

G. Existing and proposed streets, lots, land uses, buildings, structures, utilities, open space areas, recreation facilities and building setback lines.

H. Approximate locations for proposed stormwater management facilities.

I. North point, graphic and written scale and date of drawing.

J. Name of subdivision and/or land development.

K. Name, address and phone number of the applicant and owner of record.

L. Name and address of the engineer, surveyor or architect responsible for the plan.

(Ord. 2002-05-02, 5/20/2002, §501)

§22-502. Preliminary Plan Requirements.

The preliminary plans shall include the following:

A. Drafting Standards. Plans shall be professionally and legibly prepared in compliance with the following.

(1) Plans shall be drawn at a scale not exceeding one inch equals 50 feet. Where two or more sheets are needed to show the entire tract, an overall site plan, with match lines, shall be provided and drawn at an appropriate scale.

(2) All plan sizes shall be 24 inches by 36 inches and shall be numbered relative to the total number of sheets.

(3) Property lines shall be drawn and labeled in conformance with accepted surveying and civil engineering practices, including dimensions shown in feet and decimal fractions thereof and bearings shown in degrees, minutes and seconds.

(a) Tract boundary lines shall be the heaviest property lines.

(b) Proposed lot lines shall be the next heaviest.

(c) Possible future lots, if shown, shall be the lightest line weight and may be shown as dashed lines.

(d) Property lines to be eliminated where two lots are proposed to be joined in common deed should be properly noted and depicted on the boundary to be removed.

(4) Bearings and distances sufficient for the legal description of all the lines shall be shown on the site plan. The error of closure shall not be greater than one part in 5,000.

(5) All proposed subdivisions shall have lots drawn to the ultimate right-of-way line.

(6) Legend sufficient to clearly distinguish between existing and proposed conditions.

B. Site Plan.

(1) Name of the subdivision and/or land development.

(2) Name, address and phone number of the applicant and owner of record.

(3) Name, address and phone number of the firm that prepared the plan and the professional seal of the individual(s) certifying its accuracy and compliance with applicable standards.

(4) Date of preparation of the plan and a descriptive list of revisions to the plan and the revision dates.

(5) North point and graphic and written scale.

(6) Location map showing the relationship of the subject tract to the surrounding road network and major physical features, drawn at a scale not exceeding one inch equals 800 feet.

(7) The overall tract boundary, with bearings and distances and total tract acreage.

(8) Zoning classification(s), owner names and tax parcel numbers of all lands abutting the tract.

(9) Tax parcels numbers, deed book and page numbers of all parcels being subdivided or developed.

(10) Description of variances, special exceptions, conditional uses and waivers that are required, the dates they were granted and any conditions.

(11) Bearings and distances for all easements, including deed restricted areas such as, floodplain boundary, riparian buffers, wetland transitions areas or other covenants.

(12) A table showing the dimensional requirements of the zoning district(s) in one column and what the applicant proposes in another column.

(13) Site capacity calculations, including net and gross acreage for all lots.

(14) Layout of all proposed lots, including the bearings and distances, building setback lines and number of lots or dwelling units.

(15) All existing survey control elements and required concrete monuments and iron pins.

(16) Location of all proposed buildings, including gross floor area, configuration, size and height. Architectural sketches are encouraged to be submitted showing elevation, perspective, building materials and colors.

(17) Location and dimensional information for proposed streets, access drives, driveways, parking areas, rights-of-way, curbs, sidewalks, pedestrian walkways, sight distances and clear sight triangles.

(18) Parking area requirements and calculations per the Township Zoning Ordinance [Chapter 27].

(19) Open space, agricultural areas and recreation facilities, including locations, size, use and types of facilities.

(20) Plan notations regarding offers of dedication of public rights-of-way and improvements and plan notations for ownership and maintenance responsibilities of open space, agricultural areas, easements, storm-water management facilities and utilities.

(21) The following recording notes and certifications shall be provided for recording of the final plans: Professional land surveyor's certification, professional engineer's certification, professional wetlands/soils scientist's certification, Bucks County Recorder of Deeds Certification, ownership acknowledgment; notary public statement; Bucks County Planning Commission Certification; Township Engineer's Certification; Planning Commission Chairman Approval with one signature line and Board Approval with five signature lines.

(22) Primary on-lot sewage system locations, defined on-lot sewage reserve system easements, well locations and isolation distances, as applicable. [Ord. 2010-03-01]

C. Aerial Photograph Plan.

(1) The plans shall be at a scale not exceeding 1 inch equals 400 feet, and shall show the overall tract outlined, as well as all features up to 1,600 feet from the tract boundary. [Ord. 2010-03-01]

(2) The plan shall indicate the date, source, scale and north point and be numbered in the plan set.

(3) The aerial photograph plan must show the location and distance to the nearest park, stream, major intersection, public sidewalk, walking trail and other public amenities as directed by the Township. When these amenities are located further than 1,600 feet from the property boundary, corresponding notes shall be added to the plans stating this information. [Ord. 2010-03-01]

D. Existing Features and Natural Resource Plan. Within the tract proposed for subdivision and/or land development and within 100 feet of the tract boundary, the following information shall be shown on the preliminary plan:

(1) Streets bordering or crossing the tract, including locations, names, legal and ultimate rights-of-way, cartway widths, surface conditions and location of curbs, sidewalks and existing utility poles and signs.

(2) Water resources, including lakes, ponds, wetlands, watercourses and floodplain boundaries.

(3) Location of all existing monuments and other survey control elements.

(4) Public or private water supply facilities, including pipe length, size and material and fire hydrant locations.

(5) Sanitary sewer facilities, including pipe length, size, material, slope and invert and rim elevations.

(6) Storm sewer facilities, including pipe length, size, material, slope and invert and grate elevations.

(7) Any individual tree to be removed shall be designated by an "X" marked on the tree.

(8) Other natural features including:

(a) Location, size and species, of individual trees six inches in diameter or greater, when standing alone or in small stands. The plan shall also identify any diseased tree(s).

(b) Outer limits of woodlands. Approximate limits of site disturbance, including a clear delineation of existing vegetation, including trees, hedge rows, wooded areas, scrub growth, meadow and actively farmed land. Indicate items to be removed and items to be preserved, including method of preservation. Trees need not be individually identified in areas proposed to be set aside as open space or in areas proposed not to be disturbed.

(c) Locations and limits of geologic features that may affect the locations of proposed streets or buildings, including rock outcroppings, quarries and sink holes.

(d) Natural resources that are protected by the provisions of the Township Zoning Ordinance [Chapter 27], such as floodplains, wetlands, steep slopes, riparian areas, forests, agricultural soils and other features.

(9) Soil information, including soil types, mapped limits, names, classification and a table showing the significant limitations (such as high water table and shallow depth to bedrock) for each soil type.

(10) Contour information including:

(a) Contour lines measured at vertical intervals of two feet, as determined by an onsite field survey, not interpretation of United States Geologic Service (U.S.G.S.) Maps. The plans shall indicate the benchmark elevation and the location and shall be based on the Chalfont-New Britain Township Joint Sewage Authority vertical datum.

(b) Areas identified as eight to 15% slopes, 15 to 25% and 25% or steeper slopes. These slopes shall be shaded with different patterns.

(11) Other manmade existing features, including:

(a) Existing land uses on the property.

(b) Location, size, character and use of existing buildings. Any building to be demolished shall be labeled "To Be Removed."

(c) Location and use of existing buildings and other structures less than 100 feet beyond the tract boundaries.

(12) All information shown on the plans shall be from a survey conducted within two years of the date of the application. [Ord. 2010-03-01]

E. Grading and Utility Plan.

(1) Existing and proposed contour lines for the entire site shown at vertical intervals of two feet, including spot elevations at each corner of a dwelling and building and along proposed road widening, curbs, retaining walls and high points.

(2) Location of dwellings, buildings, building setback lines and finished floor and top of foundation elevations.

(3) Location of proposed streets, access drives, driveways, parking areas, rights-of-way, easements, curbs, sidewalks, fire lanes, recreational pathways and pedestrian walkways.

(4) Proposed stormwater management facilities and storm sewer systems, including pipe length, size, material, slope and invert and grate elevations.

(5) Sanitary sewer facilities, main and lateral locations, including pipe length, size, material, slope and invert and rim elevations.

(6) Locations of on-lot sewage disposal systems and replacement areas with proposed grading. [Ord. 2010-03-01]

(7) Public or private pump stations and treatment plant locations.

(8) Water supply facilities, including water mains and services, pipe sizes and materials and fire hydrant locations.

(9) Locations of on-lot wells, including identification of the one hundred-foot well protection area.

(10) Any required utility construction specifications shall be noted on the plan.

F. Erosion and Sedimentation Control Plan.

(1) All plan information required for the grading and utility plan.

(2) Soil information, including soil types, mapped limits, names, classification and a table showing the significant limitations (such as high water table and shallow depth to bedrock) for each soil type.

(3) All erosion and sedimentation control measures, specifications and details in accordance with the Bucks County Conservation District.

G. Landscaping Plan.

(1) Existing and proposed contour lines shown at vertical intervals of two feet.

(2) Location of buildings, building setback lines, proposed streets, access drives, driveways, parking aisles, rights-of-way, easements, curbs, sidewalks, walkways and utilities.

(3) Location of all proposed landscape plantings and tree protection fence.

(4) Other related landscape features such as berms, water features, open space areas and agricultural areas.

(5) The limits of clearing shall be shown, and all individual trees, vegetated areas and woodlands, designated to remain, shall be included in the Tree Protection Zone in accordance with the Zoning Ordinance [Chapter 27].

(6) A planting schedule chart indicating the required and proposed trees, evergreens and shrubs.

(7) Planting details and notations for installation procedures, specifications and guarantees.

H. Lighting Plan.

(1) Location of all proposed streetlights, lighting fixtures and standards, including wall mounted lights.

(2) Location of buildings, building setback lines, proposed streets, rights-of-way, parking areas, sidewalks and walkways.

(3) Location of all proposed landscape plantings.

(4) All individual trees, vegetated areas and woodlands designated to remain and other related landscape features such as berms, water features, etc.

(5) Iso-footcandle data and plots for each proposed lighting fixture.

(6) Lighting manufacturer's details for all proposed fixtures, including lamps, photo control devices, shields, poles and foundation supports.

(7) Lighting intensities in footcandles plotted for the entire site.

I. Horizontal Plan and Profile.

(1) Street centerline profile, with elevations at fifty-foot intervals, slope for all tangents, profile of existing ground surface and profile along any cul-de-sac curbline. Vertical curve data shall also be provided, including length, elevations at the beginning and ending of the vertical curve.

(2) Horizontal plan of street centerline, with bearings, distances, curve data, stations corresponding to the profile. In addition, tie-in information to intersections of all public streets, including street name, cart-way width, curb lines and right-of-way.

(3) Horizontal plan and profile for sanitary sewers, water mains and storm sewers, showing all required design information and elevations and profile of existing ground surface.

(4) Centerline profile for all access drives from the parking area to the street intersection, showing elevations at ten-foot intervals, slope, ultimate right-way line and curb line and edge of pavement.

(5) Required and provided sight distance lines and measurements.

J. Construction Detail Plan.

(1) Details for any bridges, retaining walls, sidewalks, curbs, stormwater management facilities, water facilities, sanitary sewer facilities and other structures as required.

(2) Details for any easements.

(3) Street, access drive and driveway paving cross-section details.

(4) Construction notes and specifications as may be required.

K. Stormwater Plan. The plan shall include a post-construction stormwater management plan in accordance with the New Britain Township Stormwater Management Ordinance, as amended. [Ord. 2010-03-01]

(Ord. 2002-05-02, 5/20/2002, §502; as amended by Ord. 2010-03-01, 3/22/2010, §VII)

§22-503. Final Plan Requirements.

1. The drafting standards shall be the same as those required for preliminary plans.

2. Final plans shall include all information required for preliminary plans.

3. Final plans shall show locations of all utility lines including, but not limited to, electric, natural gas, telecommunication, cable television and any other utility line required to support the proposed subdivision and/or land development.

4. The final plan shall be submitted in conformance with the conditions imposed and agreed to as part of the preliminary plan approval by the Board.

5. Description of any variances or waivers that were granted, the dates they were granted and any conditions that were applied shall be listed on the site plan.

6. Final plans shall indicate all applicable supporting documentation with latest revision dates including, but not limited to, stormwater management report, erosion and sedimentation control report, post-construction stormwater management plan/report, traffic impact study, community impact assessment report, and any other report or study generated by the applicant during the preliminary plan or final plan review process. [Ord. 2010-03-01]

(Ord. 2002-05-02, 5/20/2002, §503; as amended by Ord. 2010-03-01, 3/22/2010, §VIII)

§22-504. Minor Plan Requirements.

1. The drafting standards shall be the same as those required for preliminary plans.

2. Minor Plan, Lot Line Adjustment. The following plan information shall be shown:

   A. All information required for a preliminary site plan, except for site capacity calculations, parking area calculations, sight distance and clear sight triangle requirements.

   B. The lot line proposed to be adjusted, shown as a dashed line and labeled "Lot Line to be Removed."

   C. The lot line after adjustment, drawn using the standard lot line delineation at a heavier line weight than the other lot lines and labeled "Proposed New Lot Line."

   D. The area of the parcel being conveyed. This parcel shall be labeled "This area to be conveyed to (Name and Tax Map Parcel Number)."

3. Minor Plan, Land Development. The plan requirements shall be the same as those required for preliminary and final plans, except for the following:

   A. An aerial photograph plan shall not be required.

   B. Horizontal plan and profile shall not be required.

   C. Existing features and natural resource plan shall be submitted for the property only.

   D. The applicant may submit one minor plan that combines all other plan requirements.

(Ord. 2002-05-02, 5/20/2002, §504)

§22-505. Community Impact Assessment Report.

1. Purpose. The impact on the environment and the community generated by subdivision and/or land development necessitates a comprehensive analysis of the various problems that may result and the actions that can be taken to minimize these problems.

2. Submission Requirements. Four copies of a Community Impact Assessment Report shall be submitted to the Township with the preliminary plan application.

3. An application for subdivision and/or land development shall be considered incomplete without the required Community Impact Assessment Report. A Community Impact Assessment Report shall be required for the following:

   A. Residential subdivision of 15 lots or dwelling units or more.

   B. Nonresidential subdivision of 10 lots or more.

   C. Nonresidential land development:

      (1) Shopping center.

      (2) Commercial. A commercial building or buildings consisting of 50,000 square feet or more of total floor area.

(3) Office. A development consisting of 50,000 square feet or more of total floor area.

(4) Industrial. A development consisting of 50,000 square feet or more of total floor area or any truck terminal as a principal use.

(5) Institutional. Hospital, nursing home or institution development consisting of 50,000 square feet or more of total floor area.

4. Components. The Community Impact Assessment Report shall contain the following components:

A. Overview and Description.

(1) A description of the proposed project, including the proposed uses, number and sizes of buildings and lots, architectural renderings, phasing of the project and the extent of alterations and improvements to the site.

(2) A statement shall be included indicating the existing and proposed ownership of the tract and where applicable the type of ownership, operation and maintenance proposed for open space or other areas not under the control of a single lot owner.

(3) A plan, drawn at a scale not exceeding one inch equals 100 feet, shall be included with the Community Impact Assessment Report, which shows the information required by this Section.

B. Compatibility. Demonstrate the compatibility of the proposed project with the New Britain Township Comprehensive Plan.

C. Visual Resources. An identification of the visual resources associated with the tract. This includes views onto the tract from surrounding roads and properties and views from the tract. A sufficient number of color photographs of the tract are required to express the visual resources. Photographs shall be properly identified or captioned and shall be keyed to a map of the site.

D. Physical Resources Inventory. Physical resources such as topography and shall be described in a narrative and mapped at a scale not exceeding one inch equals 100 feet.

(1) The geological characteristics of the tract, including the location and boundaries of rock formations, faults and fractures.

(2) The hydrological characteristics of the tract, including the following:

(3) Surface water resources and their drainage characteristics, including creeks, streams, ponds, lakes, springs, wetlands, watersheds, floodplains and manmade structures and impoundments. The existing and proposed surface runoff from the tract shall be calculated, including the potential development of the remainder of the watershed. The flow, depth, capacity and quality of the receiving waters shall be investigated.

(4) Groundwater resources, including aquifers and aquifer recharge areas, depth to groundwater and water supply capabilities. If the proposed subdivision and/or land development involves individual wells, the analysis shall include the information required in this Chapter.

E. Biological Resources Inventory. Biological resources shall be characterized in a narrative description and mapped at a scale not exceeding one inch equals 100 feet.

(1) The existing vegetation on the tract, including the locations and boundaries of woodlands and forest areas, specimen trees, shrubs and other plants and ground cover.

(2) The existing wildlife on the tract, including their species and habitats. This map may draw upon vegetation, hydrology and soil maps in order to express habitat characteristics associated with terrestrial and aquatic wildlife on the tract.

F. Land Use and Existing Features Inventory. An identification of the land uses and existing features on the tract and mapped at a scale not exceeding one inch equals 100 feet.

(1) The land cover characteristics of the tract, including paved or other surfaces, woodland, cultivated areas, pasture, lawns, landscaped areas, etc.

(2) Any encumbrances on the tract, such as easements, rights-of-way or deed restrictions.

(3) Any existing features not part of the natural environment, including principal and accessory buildings, roads, driveways, utility lines and sewer and water facilities.

G. Historic Resources Inventory. An identification of the manmade features that are 50 or more years old, both on the tract and on adjacent properties. All buildings, structures, routes, trails, etc., which are on the National Register of Historic Places, the Pennsylvania Inventory of Historic Places, the Historic American Building Survey or in the records of the Heritage Conservancy of Bucks County shall be included. These features shall be de-

scribed in a narrative, and mapped at a scale not exceeding one inch equals 100 feet.

H. Community Needs Inventory. An identification of the community facility needs associated with the users and/or residents of the proposed subdivision and/or land development. The community needs assessment shall indicate in narrative form the following types of services: schools, parks, recreation areas, libraries, hospitals and other health care facilities, fire protection, police protection, ambulance and rescue services. The assessment will indicate the demand for these facilities and services and the ability of the existing facilities and services to meet the demand.

I. Utility Needs Inventory. An identification of the utility needs associated with the users and/or residents of the proposed subdivision and/or land development, including a statement whether the project is within the area to be served by public sewers under the Act 537 Plan. The utility needs inventory shall include a narrative description of the type of installations which will be used, including water supply, sewage disposal, refuse disposal, storm drainage, communications and electrical transmission; the ability of existing installations to accommodate the demands of the future users and/or residents and the need for additional or expanded utility installations.

J. Transportation System Inventory. An identification of the relationship of the transportation and circulation system needs of the proposed project to the existing street or highway network. A discussion of this relationship shall be in narrative form and shall indicate factors such as methods to be used for traffic control within the tract and at points of ingress to and egress from it and expected traffic volumes generated from the project, including their relationship to existing traffic volumes on existing streets for both peak hour and nonpeak hour traffic conditions. In addition, there shall be a discussion of the physical condition of existing streets that will service the proposed project and what improvements are proposed to remedy any physical deficiencies.

K. Demographics. An identification of the demographic characteristics related to the proposed subdivision and/or land development. The characteristics shall be presented in narrative form, with related tables and shall show the projected number of future users and/or residents of the project, and their social and economic characteristics. Such information shall be presented for buildout condition and during construction.

L. Fiscal Impact. An identification of the economic and fiscal characteristics associated with the proposed subdivision and/or land development. The characteristics shall be presented in narrative form, with related tables and shall show the fiscal impact to the costs and revenues of the Township and the Central Bucks School District. Such information shall be presented for buildout condition and during construction. The analysis shall follow the

methods presented in the most recent works by the Center for Urban Policy Research of Rutgers University.

M. Compliance with Nuisance Standards. An identification of the existing, construction related and future (after buildout) compliance with provisions of the Township Zoning Ordinance [Chapter 27], regulating noise, smoke and storage and waste disposal.

N. Analysis of Impacts. The implications of the proposed subdivision and/or land development in terms of the type of beneficial or adverse impacts which may result and whether these impacts are short term or long term. The analysis shall discuss the impacts described in subsections (B) through (M), above, as well as the following: water quality and quantity; air quality; damage or destruction of significant plant or wildlife systems or other natural or aesthetic resources; agricultural soils; displacement of people, homes, businesses and viable farms; undesirable land use patterns or the disruption of orderly community and regional growth; health, safety, and general welfare of the public. In indicating such effects, the analysis shall state whether they are primary or secondary implications, that is, whether the beneficial or adverse impacts will have a direct or indirect influence on a particular resource, condition or characteristic.

O. Mitigation Measures. An identification of measures to mitigate any adverse impacts. The applicant shall submit exhibits or diagrams that will depict the type of remedial, protective or mitigative measures described in narrative form. The measures shall include the following:

(1) Mitigation measures that pertain to existing procedures and standards related to current requirements of the State, County and/or Township, such as sedimentation control, stormwater runoff control, water quality control and air quality control.

(2) Mitigation measures related to impacts that may be unique to a specific project, such as revegetation, screening, fencing, emission control, traffic improvements, traffic control, noise control, relation of people and/or businesses and land acquisition.

P. Irreversible Impacts. An identification of any irreversible environmental or community changes that would be directly or indirectly caused by the proposed subdivision and/or land development.

(Ord. 2002-05-02, 5/20/2002, §505)

PART 6

(RESERVED)

PART 7

DESIGN STANDARDS AND PUBLIC IMPROVEMENTS

§22-700. Application.

1. The following subdivision and/or land development principles, standards and requirements shall be applied in evaluating plans for proposed subdivisions and/or land developments.

2. The standards and requirements in this Chapter shall be considered minimum standards and requirements for the promotion of the public health, safety and general welfare of New Britain Township. Applicants are always encouraged to exceed minimum standards. In addition, the Board reserves the right to require standards in excess of the minimum requirements if warranted.

3. Where literal compliance with the standards specified herein is clearly impractical, the Board may modify or adjust the standards to permit reasonable utilization of property while securing substantial conformance with the objectives and intent of this Chapter.

4. Whenever other applicable regulations impose more restrictive standards and requirements than those in this Chapter, the more restrictive regulations shall apply.

(Ord. 2002-05-02, 5/20/2002, §700)

§22-701. General Standards.

1. All portions of a tract being subdivided shall be taken up in lots, streets, public lands or other proposed uses.

2. All portions of a tract shall be designated as to their use, such as lots, roads, open space, parking areas, etc.

3. Proposed subdivisions and/or land developments shall be coordinated with existing and proposed neighborhoods both within and outside of the Township, so that the community as a whole may develop harmoniously.

4. Reserve strips controlling access to lots, public rights-of-way, public lands or adjacent private lands are prohibited.

5. Applicants shall preserve scenic areas, historic sites, other community assets and landmarks and natural amenities such as trees and waterways.

6. Plans shall be designed to avoid excessive disturbance of vegetation and movement of earth.

7. Floodplain areas shall be governed by additional standards contained in this Chapter, the Township Zoning Ordinance [Chapter 27], Township Building Code [Chapter 5] and all relevant State and Federal regulations.

8. The applicant shall construct, install and guarantee all public and private improvements required as part of plan approval including, but not limited to, streets, curbs, sidewalks, water and sewage facilities, stormwater management facilities, streetlights, fire hydrants, road signs, monuments, lot pins, utilities, trees and buffers at no cost to the Township.

(Ord. 2002-05-02, 5/20/2002, §701)

§22-702. Ordinance and Plan Conformance.

1. Township Zoning Ordinance. Proposals for land development or subdivision shall comply in all respects with the New Britain Township Zoning Ordinance [Chapter 27] of 1995, as amended.

2. Township Comprehensive Plan. Proposals for land development or subdivisions shall be consistent with the current Comprehensive Plan of New Britain Township and the Township's Act 537 Sewage Facilities Plan. All proposals shall also be consistent with the New Britain Township Open Space Plan of 2000, as amended. [Ord. 2010-03-01]

3. Federal, State, County Public Improvement Plans. Proposals shall be consistent with the location and timing of public improvements, such as roadways, water and sewage facilities, in accordance with the appropriate infrastructure plans governing those facilities. Where regional facilities are proposed in the plan, effort shall be made to preserve needed right-of-way in the proposed land development or subdivision.

(Ord. 2002-05-02, 5/20/2002, §702; as amended by Ord. 2010-03-01, 3/22/2010, §IX)

§22-703. Blocks and Lots.

1. Notwithstanding Zoning Ordinance [Chapter 27] provisions, the minimum block length shall be 500 feet and the maximum block length shall be 1,600 feet. The block width shall be the equivalent of the depth of two lots when the lots are laid out back to back, according to the requirements of the Township Zoning Ordinance [Chapter 27].

2. Blocks shall be designed to provide efficient, convenient and safe pedestrian and vehicular circulation, including the reduction of intersections with arterial streets. Blocks shall also be designed to preserve natural features that may constrain

subdivision and/or land development. Unless a watercourse is located along the rear of lots in the block, drainage should be away from the interior of the block toward the abutting streets.

3. Walkways, including public sidewalks, should be designed into blocks where necessary for safe, convenient and direct pedestrian access to commercial, institutional or open space/recreation areas, as determined by the Board.

4. General Lot Standards.

   A. Lot Size and Width.

      (1) Each lot shall meet or exceed the minimum lot area and width requirements of the Township Zoning Ordinance [Chapter 27]. The area within any existing or proposed easement shall not be counted toward the minimum lot area.

      (2) Lots that contain natural resources that are protected by the provisions of the Township Zoning Ordinance [Chapter 27] (such as floodplains, wetlands, steep slopes, forests, agricultural soils, or other features) shall be made large enough to provide suitable areas for the intended use of the lot without requiring encroachment upon the natural resources.

      (3) Lots with existing or planned public improvements such as electrical lines, underground utility easements, detention or retention basins, high voltage power lines or other facilities should be sized to allow suitable area for the intended use of the lot, without requiring encroachment on the public facilities or easements.

      (4) The depth of any proposed lot shall not exceed three times its width.

   B. Lot Frontage. Except for lane lots as regulated below, every lot shall meet the frontage requirement along the right-of-way of a public street, in accordance with the Township Zoning Ordinance [Chapter 27].

   C. Lot Lines. Lot lines shall be drawn parallel, concentric, at right angles or radial to the street right-of-way line unless not feasible or undesirable due to existing, permanent, natural or manmade features. In general, lot lines shall follow Township boundary lines rather than cross them.

5. Lot Numbering. Lot numbers and all street names shall be in accordance with Township requirements and shall be shown on the final plans.

6. Lane Lots. Lane lots shall be permitted by the Board in accordance with the Township Zoning Ordinance [Chapter 27] and the following standards:

A. A lane lot may be used for only a single-family detached dwelling and shall not be permitted in a subdivision with proposed streets or extensions of existing streets.

B. In a subdivision of five or more lots, lane lots may not comprise more than 10% of the total number of lots, rounded to the nearest whole number.

C. The access strip shall be a minimum of 50 feet wide along its entire length and configured to accommodate a future public street. If the lot is deed restricted against further subdivision the access strip width may be reduced to 25 feet.

D. Points of access for lane lots shall be separated by at least 300 feet along the street right-of-way line.

(Ord. 2002-05-02, 5/20/2002, §703)

§22-704. Easements.

1. Easements shall be provided as necessary for watercourses, stormwater facilities, drainage swales, utilities, deed restricted or conservation areas, natural resource protected areas, pedestrian or vehicular access, buffers, public access for recreational trails and/or other purposes.

2. Width of Easements.

   A. Easements for single utility lines shall be a minimum of 20 feet and easements for two utility lines shall be a minimum of 30 feet. Utility lines sharing a common easement shall have a minimum ten-foot horizontal separation and shall be approved by each utility provider.

   B. Easements for pedestrian or vehicular access shall be a minimum of 20 feet, unless a wider easement is required by the Board, upon recommendation of the Township Engineer. Easements for pedestrian or vehicular access shall not be combined with utility easements.

   C. Easements for deed-restricted or conservation areas, natural resource protected areas and buffers shall correspond to the boundary of the area protected unless a wider easement is required by the Board, upon recommendation of the Township Engineer.

3. Proposed easements shall be centered on or adjacent to front, side or rear property lines.

4. Nothing shall be placed, planted or set within the area of an easement and the area shall be kept as lawn or in a natural state.

5. Easements shall be described by metes and bounds in the deed of the property and shall be shown on the site plans. Deeds to all lots with easements shall state any and all restrictions on buildings or plantings within the easement area.

6. Easements shall allow for the maintenance, repair and reconstruction of utilities, stormwater facilities or other facilities within easements. This shall include the right of passage over such land by vehicles, machinery and other equipment for such purposes. The Township may require the owner to convey such easements to the Township as necessary, at no cost to the Township.

(Ord. 2002-05-02, 5/20/2002, §704)

§22-705. Streets.

1. General Standards.

   A. Streets shall be planned and designed in relation to existing and other proposed streets, topographical conditions, public convenience and safety and their appropriate relationship to the proposed land uses they will serve.

   B. Residential and local streets shall be laid out to discourage through traffic. In addition, they shall be designed to provide for continuation of existing streets or platted streets and for proper access to adjoining undeveloped tracts.

   C. If lots resulting from the proposed subdivision are large enough to permit future subdivision, or if a portion of the tract is not subdivided or proposed for development, adequate street rights-of-way shall be provided to permit future subdivision and/or land development.

   D. Dead-end, new-half or partial streets shall be prohibited.

   E. When a subdivision and/or land development abuts or contains an existing or proposed arterial street, the Township may require reverse frontage lots, in order to reduce the number of access points on the arterial street, separate through and local traffic and adequately protect adjacent properties.

   F. The entire street right-of-way for Township streets shall be constructed in accordance with the details listed in the Appendix. The entire street right-of-way for Pennsylvania Department of Transportation (PennDOT) streets under its jurisdiction shall apply, unless the Township standards are more restrictive.

   G. All plans that require access to a street or highway under the jurisdiction of PennDOT shall either require a highway occupancy permit prior to recording of final plans or an acknowledgment on the site plan of the requirement to obtain a highway occupancy permit prior to the issuance of a use

and occupancy permit. The highway occupancy permit is required pursuant to §420 of the Act of June 1, 1945 (P.L. 1242, No. 428), known as the "State Highway Law." Prior to formal application for a highway occupancy permit, the applicant shall submit a highway occupancy permit application, plans supporting documentation to the Township for review and approval, in accordance with the provisions of 67 PA Code, Chapter 441.3(J), as amended.

H. All streets shall be constructed both as to materials and methods, in conformance with the PennDOT Specifications Publication 408, as amended, and American Association of State Highway and Transportation Officials (AASHTO) A Policy on Geometric Design of Highways and Streets, as amended. The standards of this section apply to any proposed street or any existing street proposed to be widened.

I. Prior to applying the final wearing course to any existing or proposed roadway, the applicant must submit as-built plans for review and approval by the Township Engineer. A note to this effect shall be included on the record plan and in the sequence of construction. [Ord. 2010-03-01]

2. Functional Street Classification. Every street, road or highway within the Township shall be classified by its function and shall be subject to the requirements for its classification as contained in this Chapter. The Township classifications are arterial, major collector, minor collector and local street. These classifications are based on the standards established by the AASHTO and PennDOT and are intended to provide appropriate standards for each road, as well as to coordinate street functions and improvements among neighboring municipalities, the region and the State. Refer to the Street Classification Map listed in the Appendix for street classifications.

3. Ultimate Right-of-Way Improvements.

A. The required ultimate right-of-way and street improvements shall be designed based on the street classification in accordance with the following minimum standards:

Functional Classification	Right-of-Way Width	Cartway Width	Curbs	Sidewalks	On-Street Parking	Grass Strip Width
Arterial	100 feet	52 feet	Yes	Yes	No	3 to 6 feet
Major Collector	80 feet	48 feet	Yes	Yes	No	3 to 6 feet
Minor Collector	60 feet	36 feet	Yes	Yes	Yes	3 to 4 feet
Local Street	50 feet	28 feet	Yes	Yes	Yes	3 to 4 feet

B. The Board or PennDOT may require additional right-of-way widths, cartway widths and/or parking restrictions in order to lessen traffic congestion, improve safety or, to facilitate the adequate provision for transportation and utility improvements.

C. Where a subdivision and/or land development abuts or contains an existing street, the applicant shall be required to improve the street to the Township standards for ultimate right-of-way and cartway widths.

D. The primary street through a residential subdivision of 50 or more dwelling units shall at a minimum be designed to the specifications of a minor collector.

E. Private streets within a subdivision shall be designed to the specifications of a local street.

F. All streets proposed within a nonresidential subdivision shall be designed to the specifications of a minor collector.

G. Where a subdivision and/or land development abuts or contains an existing street, the applicant shall be required to mill and overlay the entire width of the roadway a depth of one and one-half inches. [Ord. 2010-03-01]

4. Street Intersection Design.

A. All intersection approaches shall be designed at 90º angles for a minimum of 50 feet from the edge of the intersecting street ultimate right-of-way line.

B. When existing streets abutting the site intersect at odd angles or have more than four approaches, the applicant shall be required to make corrective improvements to bring the intersection into compliance with this Chapter.

C. Intersection spacing, clear sight triangles and curb radii listed below shall be considered minimum requirements.

Functional Classification	Intersection Spacing	Clear Sight Triangle	Curb Radius
Arterial	1000 feet	100 feet	35 feet
Major and Minor Collector	800 feet	75 feet	25 feet
Local Street	500 feet	50 feet	25 feet

D. PennDOT may require a greater dimensional requirement for intersection spacing, clear sight triangles or curb radii for State Highways.

E. Street intersection spacing shall apply to streets on the same side or opposite side of the street they intersect.

F. The minimum right-of-way radius at an intersection shall equal the curb radius plus 10 feet. In no case shall the right-of-way radius at an intersection be less than 20 feet. Where streets of different functional classifications intersect, the requirements for the higher classification street shall apply.

5. Clear Sight Triangle.

A. Clear sight triangles for street intersections and driveway intersections with street right-of-way lines shall be measured from the point of intersection of the street right-of-way lines. [Ord. 2010-03-01]

B. Where differing classifications of streets intersect, the higher classification of street shall determine the dimensions used.

C. Within the area of clear sight triangles, obstructions to visibility shall not be permitted within the ranges of height between two feet and seven feet above the edge of paving. Any plant materials placed within clear sight triangles shall be properly maintained to continually comply with the height restrictions herein. The site plan shall contain a notation stating that the applicant is required to maintain the area of the clear sight triangle, and the Township has the right to enter the area and perform maintenance if deemed critical to public welfare pursuant to a Declaration of Covenants, Restrictions and Conditions approved by the Board.

6. Sight Distances. Minimum sight distances for stopping, passing and intersections shall comply with PennDOT standards.

7. Street Alignment and Grades. Horizontal and vertical curvature, normal and super-elevated cross slopes, and maximum and minimum street grades shall be in compliance with the standards contained in A Policy on Geometric Design of Highways and Streets published by AASHTO, PennDOT standards or Township standards, whichever are more restrictive.

A. Horizontal Street Alignment. Minimum horizontal alignment standards for all streets shall be as follows:

(1) Minimum centerline radii:

(a) Local Street: 150 feet.

(b) Minor Collector: 300 feet.

(c) Arterial and Major Collector: 500 feet.

(2) Long radius, gentle curves are encouraged rather than shorter radius curves connected by tangents. Minimum centerline tangents between reverse curves shall be as follows:

(a) Arterial: 200 feet.

(b) All other streets: 100 feet.

(3) Curve tangent relationships shall follow accepted engineering standards for safety and efficiency.

B. Vertical Street Alignment. Minimum vertical alignment standards for all streets shall be as follows:

(1) Vertical curves shall be used for changes in grade of more than 1%.

(2) All other vertical curve lengths shall be calculated per AASHTO design standards contained in the A Policy on Geometric Design of Highways and Streets, as amended. The length of vertical curve shall be calculated using the following Rate of Vertical Curvature values per percent of change in grade:

Functional Classification	**Crest Vertical Curvature, K**	**Sag Vertical Curvature, K**
Arterials	As recommended by PennDOT	As recommended by PennDOT
Major Collectors	110	90
Minor Collectors	80	70
Local Streets	40	40

(3) Curve grade combinations shall follow accepted engineering standards for safety and efficiency.

(4) Proposed streets with superelevation curves shall have a radii not less than 600 feet, with a maximum cross-slope of 4%.

C. Street Grades. Street grades shall be measured along the centerline in accordance with the following:

(1) Minimum centerline grade for all streets shall not be less than 1%.

(2) Maximum grades shall be as follows:

(a) Minor Collector and Local Street: 8%.

(b) Arterial and Major Collector: 6%.

(3) At all approaches to intersections, grades for arterial and major collector streets shall not exceed 3% for a minimum distance of 100 feet from the intersection of curblines or edges of cartways. Street grades for all other streets shall not exceed 3% for a minimum distance of 50 feet from the intersection of curblines or edges of cartways.

8. Permanent Cul-de-Sac Streets.

A. Cul-de-sacs within New Britain Township are discouraged and connectivity with existing public streets is required where determined feasible by the Township. [Ord. 2010-03-01]

B. Cul-de-sac streets shall have a minimum length of 400 feet, but shall not exceed 800 feet in length nor serve more than 25 dwellings or units. Cul-de-sac

streets may be extended to 1,200 feet upon approval by the Board. Measurement of the length shall be from the edge of cartway of the abutting through street to the center of the cul-de-sac turnaround, measured along the cul-de-sac street centerline.

C. Cul-de-sac streets shall be provided with a left side turnaround configuration at the closed end with a minimum right-of-way radius of 60 feet and a minimum paving radius of 50 feet.

D. Cul-de-sac streets shall be permitted only as side streets extending from a through street. Such streets may not create a four-way intersection unless two permanent cul-de-sac streets intersect directly opposite one another along a local access street.

E. Cul-de-sac streets shall be prohibited from being connected to another cul-de-sac street.

F. A fifteen-foot by twenty-foot snow storage easement shall be required along the right-of-way of the cul-de-sac bulb at a location approved by the Board.

9. Temporary Cul-de-Sac Streets.

A. Temporary cul-de-sac streets shall be constructed as permanent cul-de-sac streets.

B. Temporary cul-de-sac streets shall be constructed to the tract boundary line at a location and grade that are logical for extension onto the abutting tract.

C. Temporary cul-de-sac streets shall not be extended as cul-de-sac streets, but shall be connected to another through street.

D. Those portions of the turnaround extending beyond the street ultimate right-of-way shall be located on temporary access easements, in a form approved by the Township Solicitor. Upon extension of the street, the area of the temporary easements shall revert to the landowners of the adjacent lots on which they were located.

E. A note shall be added to the site plan stating that the applicant responsible for extension of the temporary cul-de-sac street shall also be responsible for the following:

(1) Removal of all paving, curbing and sidewalks associated with the temporary turnaround beyond the width of the street's cartway.

(2) Installation and/or extension of utilities, sidewalk, curb and cartway paving to complete the street connection.

(3) Grading, installation and restoration of areas where affected by the street extension.

F. A two-foot by three-foot double-sided sign stating "Future Street to be Extended" shall be installed at the end of each temporary cul-de-sac street. The double-sided sign shall be aluminum, green, with three-inch white letters.

10. Single Access Loop Streets. Such streets shall be permitted when no alternatives are determined to be feasible due to physical site constraints, property geometry and/or limited street access, upon approval by the Board. When permitted, the maximum number of lots or units shall be 25 and the maximum length shall be 2,400 feet, measured from the intersection with the through street, along the centerline around to its own intersection.

11. Alleys.

A. Alleys shall have an easement width of 20 feet, a cartway width of space 16 feet and shall be built to local road construction standards.

B. No parking shall be permitted or provided for within the cartway of an alley.

C. Street systems that contain alleys shall be designed to discourage through traffic on the alleys.

D. Any portion of an alley located between two points of ingress and egress shall provide for rear access to not more than 20 dwelling units.

E. Alleys may only intersect local streets and dead-end alleys are not permitted.

F. The maximum length of alleys shall be 660 feet as measured from the edge of cartway of the adjacent local streets.

G. Alleys shall be centered on a rear or side property line and shall be dedicated to the Homeowners Association.

H. Easement rights of access shall be granted to all properties served by an alley.

I. The Homeowners Association shall be responsible for all maintenance and repair, including snow removal and maintenance to local street construction standards.

J. Parking along local streets that are adjacent to alleys shall be limited to a distance of 30 feet from the alley centerline.

K. Alleys shall be required for a minimum of 50% of all dwelling units within a B10 Village house development.

L. In order to minimize traffic speeds throughout developments with alleys the Board may reduce the centerline radius of the streets.

12. Street Naming.

A. All proposed street names shall be recommended by staff and reviewed by the Township Fire Marshal's office for duplication. Street names shall be subject to approval by the Board.

B. Streets that are extensions of or in alignment with existing streets shall bear the names of the existing streets.

C. All street regulatory signage shall be in accordance with PennDOT regulations and shall be installed on standard PennDOT approved breakaway posts. Types and samples of street nameplates, standards, installation and location shall be in accordance with the details listed in the Appendix, and subject to the inspection and approval of the Township Superintendent of Public Works. [Ord. 2010-03-01]

D. Applicants are encouraged to choose street names with historical, geographic, topographic or other local significance. Street names shall not be repeated within the Township.

E. Street name signs shall be erected prior to issuance of the first occupancy permit.

F. The street name sign shall be located in order to be visible at all times with a minimum of effort by both pedestrian and vehicular traffic. The sign shall be as close to the side of the cartway or curb as practical, but no part of the nameplate shall be permitted to hang over any part of the cartway or curb. On street intersections where streets cross, there shall be at least two street name signs. At intersections where one street ends or joins with another, there shall be at least one street name sign. At all intersections with new or modified traffic signals, street name signs for each intersecting street shall be installed on the traffic signal mast arms, in accordance with current PennDOT standards.

G. All roadway signs, regulatory (warning and street name signs) shall be of high intensity prismatic material meeting minimum ASTM Type III retro-reflective standards; no engineer grade signs shall be accepted. [Ord. 2010-03-01]

H. The sizes of all signs shall meet the following standards.

(1) Stop signs (R1-1) shall be 30 inches by 30 inches.

(2) Speed limits signs (R2-1) shall be 24 inches by 30 inches for two-lane roadways and three or more lane roadways with a maximum speed of 40 MPH. Speed limit sign size shall be 30 inches by 36 inches for roadways with three or more lanes and speeds of 45 MPH or greater.

(3) All warning signs shall follow Pennsylvania Department of Transportation, Publication 236M or most current.

(4) The applicant shall seek guidance from the New Britain Township Public Works Superintendent for additional information or further clarification of types and sizes of signs.

(5) Posts for street signs shall be U-Channel, two and one-half pounds per foot galvanized steel breakaway structure of 10-foot length with a three and one-half foot base and include lap splice hardware. Hardware for mounting signs to post shall be two and three-eights inch by five-sixteenth inch one-way bolts and five-sixteenth inch breakaway nuts.

(6) Street name signs must meet current PennDOT requirements as set forth below or as revised by PennDOT:

(a) Nine inch wide signs of extruded aluminum with six inch letters in high intensity prismatic material.

(b) All signs shall have a green background with white HIP letters, all in pressure sensitive material.

(c) All signs shall be mounted on a two and three-eighths inch aluminum round post cemented into the ground to a minimum of two foot depth and eight foot width, and eight foot minimum out of the ground.

(d) All signs must be mounted on vandal-proof hardware with the proper size bracket depending on the sign length; four inch for up to a 24 inch long sign blank and one inch for anything longer than 24 inches.

[Ord. 2010-03-01]

13. Access Drive and Driveway Intersections.

A. The location of any proposed access drive or driveway intersecting a street may be prohibited by the Board where such intersections would create a hazard to traffic flow and safety issues such as street grades, frequency of intersections, or limited sight distances. In such cases, alternative locations for vehicular access or shared access drives or driveways shall be required.

B. When streets of different classifications are involved, all access drives and driveways shall provide access to the street of lesser classification.

C. All access drives and driveways shall be provided with a stopping area of 20 feet, at a maximum grade of 3%, measured from the edge of cartway.

D. All access drive and driveway construction shall be designed in accordance with the details listed in the Appendix and the following criteria:

Type of Access	Driveway Width	Minimum Radius	Maximum Grade	Maximum Change of Grade
Residential Driveways	12 feet 16 feet (shared*)	10 feet	8%	6%
Non-Residential Access Driveway	10 feet (one-way) 25 feet (two-way)	25 feet 25 feet	6% 6%	7% 7%

[Ord. 2010-03-01]

E. A minimum distance of 100 feet shall be maintained between access drives and driveways on a single lot.

F. A minimum distance of five feet shall be maintained between any access drive or driveway and any side or rear lot line.

G. Driveways shall be located at least 40 feet from street intersections, measured from the centerline of the driveway to the point of intersection of the street ultimate right-of-way lines (extended).

H. Clear sight triangle for access drives and driveways intersecting a street shall be measured from the point of intersection of the street right-of-way line and edge of the access drive or driveway. For access drives and driveways, the dimensions used shall be determined by the classification of street being intersected. The site plan shall contain a notation that states that the applicant is required to maintain the area of the clear sight triangle and the Township has the right to enter and perform required maintenance in the area if deemed critical to public welfare pursuant to a Declaration of Covenants, Restrictions and Conditions approved by the Board. The applicant shall be required to obtain easements from adjoining property owners if deemed critical to public welfare.

I. When sidewalks are installed across an access drive or driveway, a concrete apron shall be required in accordance with the detail listed in the Appendix.

J. Driveways shall have a minimum turnaround area of 10 feet by 20 feet, or as recommended by the Township Fire Marshal's Office and approved by the Board.

14. Paving Standards.

A. The pavement construction of all streets, access drives and driveways shall be in accordance with the details listed in the Appendix.

B. The road subgrade shall be prepared to the established subgrade elevation, and compacted in compliance with PennDOT Specifications Publication 408, as amended.

C. Pavement underdrains shall be placed along both sides of all proposed streets and in areas of cartway widening of existing streets, in accordance with the details listed in the Appendix.

D. All driveways serving lots of two acres in size or less shall be paved for their entire distances. All driveways serving lots larger than two acres shall be paved for a minimum of 50 feet from the edge of the street or to the ultimate right-of-way, whichever is greater.

E. Bituminous paving mixtures shall not be installed between October 31 and April 1, unless otherwise permitted by the Township Engineer. Bituminous paving mixture shall not be placed when surfaces are wet or when the temperature is 40° F. or lower of either the air or the surface on which the mixture is to be installed.

15. Crosswalks.

A. Crosswalks shall be required at intersections and at other locations where necessary to facilitate pedestrian circulation and to provide access to community facilities.

B. Crosswalks shall be a minimum of five feet in width and shall be constructed in accordance with PennDOT standards.

C. The Board may require bollards, special paving material, striping, signage or lighting to improve the function of a crosswalk.

D. Crosswalks shall consist of brick red thermoplastic street imprint with herringbone pattern and 6 inch white stripes, unless otherwise approved by the Board of Supervisors. [Ord. 2010-03-01]

16. Roadside barriers and guide rails shall be required in compliance with PennDOT Design Manual, Part 2, Highway Design, Chapter 12 (PennDOT Publication 13), as amended. Construction and materials shall be in compliance with applicable PennDOT standards.

17. The applicant shall be responsible for furnishing and installing all traffic signals, traffic regulatory signs, speed limit signs and pavement striping and markings that are required by the Township or PennDOT. The applicant shall coordinate furnishing and installing these items with the Public Works Superintendent. Labor and materials furnished by the Township shall be paid by the applicant. The applicant shall install such traffic signals, signs and markings prior to the issuance of the first building permit for that street. All traffic signals, signs and markings shall comply with specifications of PennDOT for Traffic Signs, Signals, and Markings (PennDOT Publication 68), as amended, and PennDOT Publication 203, Work Zone Traffic Control (1967 PA Code, Chapter 203), as amended.

(Ord. 2002-05-02, 5/20/2002, §705; as amended by Ord. 2010-03-01, 3/22/2010, §§X–XII)

§22-706. Curbs and Sidewalks.

1. Required Curb Locations.

   A. Curbs shall be installed along each side of every proposed street in a subdivision and/or land development.

   B. Curbs shall be installed along the property frontage of every existing street abutting a proposed subdivision and/or land development.

   C. Curbs shall be required for all parking areas, including access drives and services drives, with a capacity of four or more vehicles.

   D. All proposed curbs shall have a minimum radius of curvature of five feet, unless a greater radius is required by this Chapter or the Zoning Ordinance [Chapter 27].

2. Required Sidewalk Locations.

   A. Sidewalks shall be installed along each side of every proposed street in a subdivision and/or land development.

   B. Sidewalks shall be installed along the property frontage of every existing street abutting a proposed subdivision and/or land development.

   C. Sidewalks shall be located within a public right-of-way, public easement or common open space area. Sidewalks shall create an interconnected system within the subdivision and/or land development and shall also connect with any sidewalks adjacent to the tract.

   D. Sidewalks shall be a minimum of five feet in width. In nonresidential areas, or where significant pedestrian traffic is anticipated, the Board may require wider sidewalks.

   E. The alignment and gradient of sidewalks shall be coordinated with the grading plan to prevent the passage of concentrated surface water on or across the sidewalk, and to prevent the pocketing of surface water by the sidewalk.

3. Design Standards.

   A. All curbs and sidewalks shall be designed and constructed in accordance with specifications and details listed in the Appendix and in accordance with current ACI and PennDOT standards. [Ord. 2010-03-01]

   B. All curbs and sidewalks shall provide access for persons with disabilities in accordance with Americans with Disability Act, as amended.

   C. Curbs shall be constructed of concrete within all public rights-of-way.

D. All sidewalks shall have a maximum centerline grade of 8%.

E. Belgian block curb must be used for proposed residential streets, except within PennDOT right-of ways. A note shall be added to the record plan stating "The applicant will contribute individual Belgian blocks, having a uniform color and size that matches the installed blocks, consisting of 5 percent of the total linear curb footage along the streets. The applicant will deliver the Belgian blocks to the Township Public Works Facility and will be stored at a location approved by the Superintendent of Public Works. All Belgian blocks not having uniform color matching the installed blocks may be rejected." [Ord. 2010-03-01]

F. The applicant shall demonstrate that accessible routes meet ADA standards by providing sufficient spot elevations to verify grades. All curbs shall be designed in accordance with the latest PennDOT standards. [Ord. 2010-03-01]

G. All curb ramps shall be provided with "brick red" detectable warning surfaces or other approved contrasting color. [Ord. 2010-03-01]

(Ord. 2002-05-02, 5/20/2002, §706; as amended by Ord. 2010-03-01, 3/22/2010, §XIII)

§22-707. Pedestrian Walkways, Recreational Trails, and Bicycle Lanes.

1. Pedestrian Walkways and Recreational Trails. Pedestrian walkways provide access through residential developments and open space, or to connect to institutional, commercial, industrial and recreational facilities. Recreational trails provide facilities for walking or bicycling as a recreational or educational activity.

A. Required Locations. The Board, upon the recommendation of the Trail Committee and/or Planning Commission, may require pedestrian walkways or recreational trails at locations that include, but are not limited to, the following:

(1) To connect to schools, parks, recreation facilities, community buildings, commercial or employment centers or other facilities that are the destination of pedestrians or bicyclists.

(2) To connect between streets in the middle of residential blocks which are more than 1,000 feet in length.

(3) To facilitate pedestrian travel in areas where a conventional sidewalk is impractical.

(4) To pass through and connect different open space areas within a development, especially along streams and other linear landscape features.

B. Design Standards.

(1) Whenever possible, the location of the walkway or trail should include natural areas, historic sites, views or vistas or access to other unique areas of interest to the community and shall be located either on required open space or dedicated easements to the Township.

(2) The minimum width of a pedestrian walkway shall be six feet. The minimum width of a recreational trail that is anticipated to have bicycle traffic shall be eight feet. The width of a recreational trail shall be increased in the following areas: on hills; around sharp turns; where raised curbs exist on one or both sides of the trail and in areas of vehicular traffic or parking.

(3) If a pedestrian walkway is contiguous to a bicycle trail, then the walkway shall be widened, clearly marked, and striped to separate pedestrians from bicycles and improve safety.

(4) The maximum centerline grade shall not exceed 8%.

(5) The design centerline profile shall be shown on the plan.

(6) Vertical curves shall be designed for changes in grade. Breaks in grade are not permitted.

(7) Horizontal curves shall be designed for changes in direction.

(8) Curb ramps shall be required at all intersecting streets. Curb ramps shall have a maximum slope of six horizontal to one vertical, with maximum side of two horizontal to one vertical.

(9) Minimum vertical clearance shall be 10 feet.

(10) Bollards, fences or other barriers may be required in motor vehicle areas.

(11) Minimum width, design and construction standards for bicycle trails may be increased if construction, maintenance or emergency vehicles are anticipated to use the trail.

(12) The Board may require lighting for certain pedestrian walkways or recreational trails, at intersections or other potentially hazardous locations.

(13) The Board may require pedestrian walkways or bicycle trails to have any of the following features:

(a) Bridges to cross natural features such as streams or grade separation from major roads or intersections.

(b) Rest areas at regular intervals. These areas may include benches, picnic tables, bike racks and trash barrels, as appropriate.

(c) Traffic control devices where pedestrian walkways or recreational trails cross streets. Semi-actuating (push button) switches may be required.

(d) Landscaping and buffering, in order to reduce potential conflicts with adjacent land uses.

C. Construction Standards. As approved by the Board, pedestrian walkways or recreational trails shall be constructed of concrete or asphalt, unless more suitable materials are required in environmentally sensitive areas. Asphalt pedestrian walkways or recreational trails shall be constructed with two and one-half inches of wearing course and six inches of 2A stone subbase. Concrete pedestrian walkways or recreational trails shall be constructed with four inch class 'AA' (3,500 PSI) concrete and four inches 2B (Clean) stone subbase. [Ord. 2010-03-01]

2. Bicycle Lanes.

A. Bicycle lanes on public streets may be required by the Board in locations where off-street bicycle facilities are not feasible because of physical constraints or ownership patterns of land.

B. The design and construction standards for bicycle lanes on streets shall be the same as for the streets themselves, with respect to pavement construction, alignment and grades, sight distances, etc.

C. When a bicycle lane is proposed on the shoulder of any street, the street shall be widened by a minimum of five feet beyond the travel lanes as required in this Chapter.

D. Bicycle lanes shall be delineated by pavement markings, curbs, signage or other materials suitable to improve function.

E. Bicycle lanes on Federal highways shall comply with the standards of the U.S. Department of Transportation, Federal Highway Administration. Bicycle lanes on State roads shall comply with the standards of the PennDOT. Bicycle lanes on County roads shall comply with the regulations of Bucks County.

3. Signs and Markings for Pedestrian Walkways, Recreational Trails and Bicycle Lanes.

A. Signs may be required at decision points along the bicycle trail or lane, such as directional changes, stop signs or intersections. The Board may also require identification signs or warning signs regarding motorists or other hazards.

B. All signs and markings shall comply with the Manual on Uniform Traffic Control Devices, U.S. Government Printing Office, 1971, as amended.

(Ord. 2002-05-02, 5/20/2002, §707; as amended by Ord. 2010-03-01, 3/22/2010, §XIV)

§22-708. Parking Areas.

1. General Standards.

   A. Parking areas shall be provided for all subdivisions and/or land developments in accordance with the Zoning Ordinance [Chapter 27].

   B. Parking areas shall be designed to create a hierarchy of access drives and parking aisles to direct vehicular traffic from a public street. Parking areas shall also be designed to separate pedestrian and vehicular traffic.

   C. On-street parking shall be parallel parking only. No angular or perpendicular parking shall be permitted along streets.

   D. Parking areas shall be designed to permit access to each vehicle without the need to move other vehicles.

   E. Nonresidential parking areas shall be designed to prohibit vehicles backing directly into any street.

   F. Entrances and exists for off-street parking areas shall be located so as to avoid interference with street traffic.

2. Parking Stalls.

   A. The minimum stall dimensions for angled off-street parking shall be 10 feet by 18 feet and eight feet by 22 feet for off-street parallel parking.

   B. All parking stall striping shall be double-lined in accordance with the detail listed in the Appendix.

   C. All proposed planting islands and strips shall be provided with curb.

   D. No more than 15 parking spaces shall be permitted in a continuous row without being separated by a ten-foot by eighteen-foot planting island.

   E. No parking area shall exceed 30 spaces in capacity, without being separated into smaller parking areas by ten-foot planting strips.

   F. Where parking stalls are proposed adjacent to a sidewalk or walkway, the minimum width of the sidewalk or walkway shall be increased to a minimum width of six feet.

   G. To separate parking areas and access drives, planting islands, a minimum of 10 feet by 36 feet, shall be provided at the end of each row of parking stalls.

   H. A single row of parking stalls located parallel to and between two access drives shall be separated by a ten-foot planting strip.

3. Parking Aisles.

   A. The primary function of parking aisles is to provide direct access from access drives to parking stalls within parking areas. Parking aisles shall not have direct access from a public street.

   B. Multiple parking aisles intersections with a main access drive shall be avoided in favor of a separate parking area, with a secondary access drive.

   C. The minimum parking aisle width shall be determined by the angle of parking and direction of traffic as follows.

Angle of Parking	**Minimum Aisle Width**
Parallel/one-way	12 feet
45 degrees/one-way	18 feet
60 degrees/one-way	18 feet
90 degrees/one-way	20 feet
90 degrees/two-way	24 feet

4. Access Drives.

   A. The primary function of access drives is to distribute traffic from public streets to parking aisles. Secondary functions include providing access to buildings, storefront areas, trash collection areas, loading facilities, fire lanes, etc.

B. The minimum width shall be 25 feet and parking along access drives is prohibited.

C. Access drives shall be designed and separated from parking areas by planting strips.

5. Service Drives Around Buildings.

A. The primary function of service drives is to provide emergency service access to the building, and to provide access to employee parking areas, loading facilities, trash collection areas and service areas.

B. The minimum width shall be 20 feet and parking along service drives shall be prohibited.

6. Parking Area Design Standards.

A. All off-street parking shall be set back a minimum of 10 feet from any street ultimate right-of-way line, sewage disposal system or private well. All off-street parking shall be set back a minimum of three feet from any side of any building. This setback shall not apply to driveways entering garages, service bays or carports.

B. The grade of parking areas shall be a maximum of 5% and a minimum of 1%. Grade changes between terraced parking areas shall not exceed three horizontal to one vertical slope.

C. All parking areas shall be paved in accordance with the details listed in the Appendix, unless higher strength paving is required due to the type of anticipated vehicles.

D. Raised pedestrian crosswalks and refuge islands shall be provided at maximum two-hundred-foot intervals along parking aisles. The Board may require bollards, special paving material, striping, signage or lighting to improve the function of crosswalks.

E. All parking areas and passenger loading zones shall comply with the requirements of the Federal Americans with Disabilities Act (ADA).

F. Dead end parking areas shall be designed to provide sufficient back-up area with a minimum depth of five feet for the end stalls.

G. Parking areas serving nonresidential uses that allow shopping carts in the parking areas shall be designed with cart return areas of suitable sizes and in suitable locations. Such cart return areas shall not be counted as parking spaces. The number and location of such cart return areas shall be approved by the Board.

H. Parking aisle, access drive and service drive intersections shall be provided with stop signs and painted stop bars.

I. The minimum radius of curvature within a parking area shall be five feet, unless a greater radius is required by this Chapter or the Zoning Ordinance [Chapter 27].

(Ord. 2002-05-02, 5/20/2002, §708)

§22-709. Off-Street Loading Facilities.

General Standards.

A. The number and use of off-street loading facilities shall be in accordance with the Township Zoning Ordinance [Chapter 27].

B. Reasonable precautions shall be taken by the applicant to ensure the availability of required facilities to the delivery and pick-up vehicles they are designed to serve.

C. Each required loading space shall be no less than 14 feet by 60 feet for a tractor-trailer and 12 feet by 35 feet for smaller trucks.

D. Each loading space and the area needed for maneuvering shall be located entirely on the lot being served and shall not conflict with parking aisles, stalls, access drives or service drives.

E. Loading facilities shall be paved in accordance with the details listed in the Appendix, unless higher strength paving is required due to the type of anticipated vehicles.

F. The loading area shall be designed and used in such a manner so that at no time will it constitute a nuisance, a public safety hazard or an unreasonable impediment to traffic.

(Ord. 2002-05-02, 5/20/2002, §709)

§22-710. Fire Hydrants, Fire Lanes, and Emergency Access.

1. General. All subdivisions and/or land developments shall comply with the following requirements of the Township Building Code and Fire Prevention Code [Chapter 5], as amended.

2. Water Supply and Fire Hydrants.

A. In all major subdivisions and all land developments involving residential, commercial, industrial or institutional land uses, one or more fire hydrants shall be installed in locations as recommended by the Township Fire Marshal's office and approved by the Board.

B. Fire hydrants shall be located within three feet of the curb along the means of access, unless another location is required by the water authority having jurisdiction.

C. Threads on fire hydrant outlets shall be American National Fire Hose Connection Screw Threads and shall be equipped with thread adapters where local fire department thread is different.

D. When the infrastructure is being installed and, prior to the location and construction of buildings or portions thereof, the water supply for fire protection, either temporary or permanent and acceptable to the authority having jurisdiction, shall be made available prior to delivery of combustible materials.

E. When the infrastructure is being installed and, prior to the location and construction of buildings or portions thereof, fire hydrants shall be installed at a spacing not to exceed 660 feet of vehicle travel distance. Where buildings are proposed, the authority having jurisdiction shall require additional hydrants and closer spacing where building size, use, construction and lack of built-in fire protection mandate.

F. At least one hydrant shall be provided within 500 feet of any building at a location recommended by the Township Fire Marshal's office and approved by the Board. No portion of the exterior walls of the building shall be more than 500 feet from a fire hydrant, where vehicular access is provided. Additional fire hydrants shall be provided to meet the remaining fire flow, if necessary.

G. Fire hydrants shall be supplied by a water main of not less than eight inches in diameter.

H. Fire hydrants must be within the following distance of a fire department connection. If mounted on the building they serve, fire department connections for sprinkler systems shall be located not less than 100 feet or more than 200 feet from a fire hydrant. If such connections are located at least 100 feet from the building they serve, they shall be located not more than 50 feet from a fire hydrant. The location of the fire department connection shall be recommended by the Township Fire Marshal's Office and approved by the Board.

I. For subdivisions and/or land developments requiring a fire flow exceeding 1,500 gpm the water supply system shall be capable of delivering the required fire flow for a minimum of two hours at 20 psi. For all other required

fire flow, the water supply system shall be capable of delivering the required fire flow for a minimum of one hour at 20 psi.

J. Water supply systems not publicly owned and installed shall meet the minimum requirements of the National Fire Protection Association Regulation 24, Standards for the Installation of Private Service Mains and Appurtenances, as amended, where no recognized waters supply system exists.

3. Fire Lanes.

A. Access to all sides of buildings for multifamily, commercial, industrial, or institutional uses shall be provided to permit fire apparatus access to the building and roof. For sprinkler buildings of less than 50,000 square feet or one-story buildings no higher than 20 feet, access may be provided on only two sides.

B. Turns in fire lanes shall be constructed with a minimum radius of 25 feet at the inside curb line and a minimum radius of 50 feet at the outside curb line.

C. Fire lanes connecting to roadways shall be provided with depressed curb in accordance with the detail in the Appendix.

D. Fire lanes shall be designed to have adequate width, radii and material strength to accommodate and support emergency vehicles. The specific locations, dimensions and maintenance of fire lanes shall be subject to the review of the Township Fire Marshal's office and approval by the Board.

E. Fire lanes shall have appropriate signage and pavement markings to prevent parking or blocking as recommended by the Township Fire Marshal's Office and approved by the Board.

4. Emergency Access.

A. At least one emergency access shall be provided for subdivisions with a proposed single access loop street or cul-de-sac street.

B. Emergency access locations for subdivision and/or land developments, involving multi-family, commercial, industrial or institutional land uses, shall be recommended by the Township Fire Marshal's office and approved by the Board.

C. The Board may require more than one emergency access for all subdivisions and/or land developments to protect and provide for the public health, safety and welfare.

D. An emergency access shall be a minimum of 20 feet wide and shall be paved or constructed of an interlocking grass paver system as recommended by the

Township Fire Marshal's office and approved by the Board. At least 13 feet six inches of nominal vertical clearance shall be provided and maintained over the full width of all emergency accesses.

E. Emergency accesses shall have appropriate signage and other markings to prevent parking or blocking.

F. All gates or chains proposed across an emergency access shall be located outside the legal right-of-way and shall open inwards. Any support poles and/or bollards shall be located at least two feet from the edge of the emergency access.

G. The fire companies shall have ready access to locking mechanisms on any gate restricting access to a fire lane or emergency access way.

(Ord. 2002-05-02, 5/20/2002, §710)

§22-711. Grading, and Erosion and Sedimentation Control.

1. General. Whenever the vegetation or topography within a subdivision, land development or lot are to be disturbed, such activity shall be in conformance with PADEP, Subpart C, Protection of Natural Resources, Article II, Water Resources, Chapter 102, as amended, and Bucks County Conservation District's Policies and Standards.

2. Performance Principles. The following measures are effective in minimizing erosion and sedimentation and shall be included where applicable in the erosion control plan:

   A. Stripping of vegetation, re-grading or other development shall be done in a way that will minimize erosion.

   B. Development plans shall preserve natural features, keep fill operations to a minimum, and ensure conformity with topography so as to create the least erosion potential and adequately handle the volume and velocity of surface water runoff.

   C. Whenever feasible, natural vegetation shall be retained, protected during and after construction and supplemented.

   D. The permanent vegetation, erosion control measures and drainage facilities shall be installed in the development as soon as practical to stabilize disturbed areas. Disturbed areas and the duration of exposure shall be kept to a practical minimum.

   E. Provisions shall be made to effectively accommodate the increased surface runoff caused by changed soil and surface conditions during and after devel-

opment. Where necessary, the rate of surface water runoff will be mechanically retarded.

3. Grading for Drainage. In order to provide more suitable sites for building and other uses, improve surface drainage, and control erosion, the following requirements shall be met:

   A. All disturbed land within a development shall be graded at a minimum slope of 2% to provide proper drainage and dispose of stormwater runoff without ponding.

   B. Concentration of stormwater runoff shall only be permitted in watercourses, swales and detention basins.

   C. Grading around buildings constructed of wood shall have a minimum separation of eight inches between the top of foundation wall and the outside finished grade elevation.

   D. Grading equipment shall not be allowed to cross any wetlands, watercourses, floodplains, etc., unless the applicant obtains the required Federal, State and Township permits.

4. Excavation and Fill.

   A. Excavation and fill slopes shall not exceed three horizontal to one vertical, unless an approved retaining wall is constructed to support the face of the excavation or fill. Retaining wall specifications and design details shall be approved by the Township Engineer prior to final plan approval by the Township.

   B. Adequate provisions shall be made to prevent surface water from damaging the cut face of excavations and the sloping surfaces of fill. Fill shall be placed and compacted so as to minimize sliding or erosion of the soil.

   C. The top or bottom edge of slopes shall be a minimum of five feet from property lines in order to permit normal rounding of the edge without encroaching onto the abutting property.

   D. Fill shall not encroach on wetlands, watercourses and floodplains. A minimum grading buffer of five feet shall be maintained from wetlands, watercourses and floodplains unless other Federal, State or Township standards require a more restrictive buffer. Fill placed adjacent to wetlands, watercourses or floodplains shall have suitable protection against erosion.

5. Soil Protection.

   A. The top six inches of soil that existed naturally on the site prior to subdivision and/or land development shall be stockpiled on the site. Following con-

struction, the stockpiled soil shall be redistributed uniformly on the site to a minimum depth of six inches.

B. All disturbed areas including the stockpile soil of the site shall be immediately stabilized and protected against erosion.

C. The applicant may stockpile any soil in excess of the six-inch depth that existed prior to subdivision and/or land development separately for other on-site uses. Soil shall not be removed from the site.

D. During grading operations, necessary measures for dust control shall be exercised.

6. Responsibility.

A. Whenever sedimentation is caused by stripping vegetation, re-grading or other development, it shall be the responsibility of the applicant causing such sedimentation to remove it from all adjoining surfaces, drainage systems and watercourses and to immediately repair any damage.

B. It is the responsibility of any applicant doing any act on or across a watercourse, natural drainageway, Waters of the Commonwealth or floodplain during the period of the activity, to return it to its original or equal condition after such activity is completed.

C. An applicant shall not block, impede the flow of, alter, construct any structure, deposit any material or commit any act which will affect normal or flood flow in any wetlands, watercourses, or floodplains, unless the applicant obtains the required Federal, State and Township permits.

7. Compliance with Regulations and Procedures.

A. The Board in its consideration of all preliminary plans for subdivision and/or land development shall condition its approval upon the execution of erosion and sedimentation control measures as contained in this Section. The Township Engineer shall ensure compliance with the appropriate policies and standards of PADEP and the Bucks County Conservation District.

B. The installation and design of all erosion and sediment control measures shall, as a minimum, be in accordance with standards and specifications of the Bucks County Conservation District.

C. Final approval of plans and specifications for the control of erosion and sedimentation shall be concurrent with the final plan approval of subdivisions and/or land developments and shall become a part of those plans.

D. An erosion and sedimentation control plan approved by the Bucks County Conservation District is required prior to the recording of final plans and any earthmoving activities.

(Ord. 2002-05-02, 5/20/2002, §711)

§22-712. Stormwater Management.

1. Purpose. Pursuant to the Pennsylvania Stormwater Management Act, Act No. 167 of October 4, 1978 (P.L. 864), as amended, and the Second Class Township Code, the applicant shall construct and/or install stormwater management facilities as necessary to:

   A. Prevent erosion and siltation of watercourses, pollution of groundwater, overloading of existing drainage facilities, undermining of floodplain management in downstream communities.

   B. Encourage groundwater recharge and promote water quality through utilization of Best Management Practices.

   C. Manage stormwater runoff created by land development activities by conveying stormwater runoff along or through the subject property to protect the public health, safety and welfare of the Township and the environment.

   D. Manage stormwater runoff created by development activities, taking into account the cumulative basin-wide stormwater impacts from peak runoff rates and runoff volume.

   E. Maintain and/or improve the existing water quality of watercourses and impoundments by preventing the additional loading of various stormwater runoff pollutants into the stream system and enhancing base flow as much as possible.

   F. Not only control the anticipated peak discharge from the property being subdivided or developed in accordance with the applicable release rate, as set forth in this Chapter, but also the existing runoff being contributed from all land at a higher elevation within the same watershed.

   G. Preserve watercourses, riparian buffers, natural drainageways, wetlands, floodplains and alluvial soils.

   H. Provide for proper maintenance of all public or private stormwater management facilities.

2. General Requirements. The standards contained in this section shall apply as minimum design standards; however, Federal, State and other New Britain Township regulations may impose standards subject to their jurisdiction. In par-

ticular, the regulations of the Township Stormwater Management Ordinances as amended shall also apply.

A. Watercourses.

(1) Whenever a stream, intermittent stream, natural drainageway or Waters of the Commonwealth is located within a development site, it shall remain open in its natural state and location and shall not be piped, unless required or approved by the appropriate Federal, State or Township agency.

(2) No stormwater runoff or watercourse shall be so diverted as to overload existing drainage systems (including existing stormwater management facilities) or create flooding.

(3) A permanent easement shall be provided along any watercourse, including any associated wetlands and floodplain, located within the boundary of any property being subdivided or developed. The purpose of any such easement shall be for the protection and maintenance of the watercourse area. The terms of the easement shall prohibit excavation, the placing of fill or structures, clearing, and any alterations that may adversely affect the watercourse. The required width of any such easement shall be the greater width as determined by the Township Engineer, U.S. Army Corps of Engineers, PADEP or other public agency having jurisdiction, but in no case shall be less than 50 feet. In zoning districts where riparian buffers and wetland margins are also required, the permanent easement shall be extended to the greater width.

(4) The Site Plan and development agreements shall contain a provision permitting access to such easement(s) for inspection or emergency repair/maintenance by the Township. In the event the applicant, lot owner or homeowners association responsible for maintenance fails to honor the responsibility set forth herein, the Township shall have the right of entry upon and within the area of the easement to undertake any required corrective or maintenance efforts. The total cost of such efforts, including administrative, engineering and legal costs for enforcement, may be imposed upon the responsible party as determined by the Township. The applicant shall retain the easement until such time as one of the following is accomplished:

(a) The easement is offered for dedication by the applicant and accepted by the Township.

(b) If an easement acceptable to the Township is established, the maintenance shall then be the responsibility of the individual lot owners over whose property the easement passes. For land developments, the maintenance shall be the responsibility of the

owner of the affected property or properties. The maintenance responsibility shall be clearly established and recorded with the Deed of Easement.

(c) A homeowners association or other legal entity, approved by the Township, assumes responsibility for the maintenance of the development, including maintenance of the watercourse easement.

B. Stormwater Management Facilities. The applicant shall install stormwater management facilities, on- and off-site, as necessary:

(1) To satisfactorily convey, detain or retain the rate of release of stormwater runoff and prevent soil erosion.

(2) To manage the anticipated peak discharge from property being subdivided or developed and existing runoff being contributed from all land at a higher elevation in the same watershed.

(3) To convey stormwater runoff along or through the property to a natural outfall, such as a watercourse, drainage swale, storm sewer or other drainage facilities. If an applicant concentrates or redirects stormwater runoff to discharge at another location on the property, the applicant is responsible for constructing an adequate channel or storm sewer system on downstream properties and rights-of-way until a natural outfall is reached. A natural outfall shall have sufficient capacity to receive stormwater without deterioration of the facility and without adversely affecting property in the watershed.

C. Where applicable, stormwater management facilities shall comply with the requirements of Chapter 102 (Erosion Control), Chapter 105 (Dam Safety and Waterway Management) and Chapter 106 (Floodplain Management) of Title 25, Rules and Regulations, of the PADEP and PennDOT, as amended.

D. No person, corporation, or other such entity shall block, impede the flow of, alter, construct any structure, deposit any material or perform any work that will affect the normal runoff onto or off of an adjacent parcel.

E. Stormwater management facilities located within or affecting the floodplain of any watercourse shall also be subject to the requirements of any Township ordinance that regulates construction and development within areas that are subject to flooding.

F. Where stormwater runoff will be collected within the subdivision and/or land development and discharged over lands within or beyond the boundaries of the subdivision and/or land development, the applicant shall reserve or obtain easements over all lands affected. The stormwater easement width shall be of adequate width to collect the stormwater runoff and for access to

the stormwater facility for maintenance and repairs. If requested by the Board, the applicant shall convey, at no cost, the easement(s) to the Township. Otherwise, all such easements shall be owned and maintained by individual lot owner(s) or another approved entity. Ownership and maintenance responsibilities shall be noted on the site plan and stormwater agreement for such shall be as approved by the Township Solicitor.

G. A stormwater management study shall be submitted with all subdivision and/or land development applications, and shall, at a minimum, include the following.

(1) Mapping, drawn to scale, of all watershed areas within a subdivision and/or land development, including areas to individual drainage structures.

(2) Narrative describing the existing site conditions, topographical features, soil conditions and limitations, proposed uses, proposed stormwater management facilities, methodology, field assumptions for stormwater analysis and proposed erosion control measures.

(3) Computations and supporting data for the design of all stormwater management facilities.

(4) Computations and supporting data for the design of all erosion control facilities.

H. When subdivision and/or land development plans are submitted for approval in phases, a complete stormwater management design for the entire subdivision and/or land development shall be submitted in the application for the first phase.

I. All proposed stormwater management facilities including those submitted with a building permit or site plan in conjunction with an approved subdivision plan shall be designed by a professional engineer licensed in the Commonwealth.

J. All as-constructed stormwater management facilities shall be surveyed by a professional land surveyor licensed in the Commonwealth, to verify compliance with the stormwater management facilities as depicted on the approved final plan. As-constructed plans shall be submitted to the Township for review and approval upon completion of all facilities and prior to offering of dedication of any public facilities and/or submission of financial security for the required eighteen-month maintenance period.

K. All sump pump and roof drains for proposed residential and nonresidential buildings shall be connected to an existing or proposed storm sewer system or discharged directly to a stormwater detention facility. Sump pump and roof drains may be discharged to a watercourse or drainage swale provided

a minimum twenty-foot drainage easement is provided over all affected properties. Sump pumps and roof drains shall not be discharged over or through a curb onto a public street or connected to a roadway underdrain system.

L. All new public streets shall be constructed with a minimum 6-inch under-drain system on both sides of the cartway in accordance with the details listed in the Appendix. A minimum 6-inch underdrain system shall also be installed along existing roadways where widening is proposed with curb in accordance with the details listed in the Appendix.

M. Additional studies and higher levels of control than the minimum levels required in this Chapter may be required by the Board to ensure adequate protection to life and property.

N. Stormwater management best management practices (BMPs) must be incorporated into the design of the stormwater management system as determined by the Township Engineer. All proposed best management practices for stormwater and erosion control shall be designed in accordance with the latest DEP BMP Manual and the Township's Stormwater Management Ordinances, as amended [Chapter 26]. [Ord. 2010-03-01]

3. Stormwater Runoff Methodology.

A. Any stormwater detention facilities required by this Chapter shall meet the applicable water quality requirement for the 1-year return period, and peak rate requirements for the two-, five-, ten-, twenty-five-, fifty- and one hundred-year return periods, consistent with the calculation methodology specified herein and in accordance with the regulations of the Township's Stormwater Management Ordinances, as amended [Chapter 26].

B. To calculate the increase in total stormwater runoff and peak flow resulting from a proposed subdivision and/or land development, the "cover complex" method will be used, as outlined in Urban Hydrology for Small Watersheds, U.S. Department of Agriculture, Soil Conservation Service, Technical Release 55 (NTIS PB87-101580) and following mathematical analyses described in Computer Program for Project Formulation–Hydrology (SCS Technical Release 20, 1983), as amended. The design of any stormwater management facility intended to meet the requirements of this Chapter shall be verified by routing the design storm hydrographs through the proposed stormwater detention facility.

C. All stormwater detention facilities shall be designed to meet the Release Rate Districts requirements in accordance with the Township's Stormwater Management Ordinances, as amended [Chapter 26].

D. All stormwater detention facilities shall be designed to meet the water quality requirements in accordance with the Township's Stormwater Management Ordinances, as amended [Chapter 26].

E. Farm field or disturbed earth (existing conditions) within a watershed, or portion thereof, used for modeling purposes shall be considered as "meadow" when developing the necessary "cover complex" calculations.

F. The Soil Conservation Service Type II twenty-four-hour rainfall distribution shall be used in the soil cover complex calculations. The twenty-four-hour rainfall depths for the return periods used in the calculations shall be in accordance with the Township's Stormwater Management Ordinances, as amended [Chapter 26].

G. In calculating the time of concentration for a watershed, the maximum length of sheet flow over paved or unpaved surfaces shall not exceed 150 feet. All time of concentration paths used for calculation purposes shall be shown on the Watershed Area Plan.

4. Detention Basin Facilities.

A. Detention basins shall be designed to utilize the natural contours of the land whenever possible. When such design is not practical, the construction of the basin shall utilize slopes as flat as possible to blend the structure into the terrain. Detention basins shall be designed to facilitate regular maintenance, mowing and periodic de-silting.

B. The use of regional detention basins to combine and eliminate numerous smaller basins is encouraged. Within subdivisions, detention basins shall be located in open space, on an individual lot, or common area, but shall not cross individual lot boundaries, unless a homeowners association will own and maintain the detention basin. If a homeowners association is not created for a subdivision, any detention basin located on an individual lot shall be owned and maintained by the lot owner.

C. All detention basin berms, including emergency spillways, shall have a maximum interior and exterior side slope of three horizontal to one vertical. The toe of any slope shall be located a minimum of five feet from any property line or street right-of-way line.

D. The maximum difference between the top of berm elevation and the invert elevation of the outlet structure shall be seven feet.

E. Post-development runoff volume generated from the 1-year, twenty-four-hour design storm shall be controlled so that it is released over a minimum of 24 hours. Except with the 1-year design storm, basins shall be designed so that they return to normal conditions within 12 hours after the termination of the storm.

F. The grading and utility plan shall contain a note that all detention basin embankments shall be placed in lifts not to exceed one foot in thickness.

Each lift shall be compacted to a minimum of 95% of Modified Proctor Density as established by A.S.T.M. D-1557.

G. Outlet pipes from detention facilities shall be designed to control the peak rate for the one-hundred-year design storm. All basin outlet pipes shall be watertight reinforced concrete having "0-Ring" joints, with a minimum size of 18 inches.

H. An emergency spillway shall be provided for a detention basin in order to convey basin inflow in excess of design flows, or in the event the outlet structure becomes blocked and is unable to convey the design flow. The minimum capacity of the emergency spillway shall be equivalent to the 100-year peak inflow rate for the post-development design storm. Emergency spillways shall be constructed with a suitable liner, as determined by the Township Engineer, designed in accordance with the manufacturers' specifications, back-filled with topsoil, and seeded to protect the berm against erosion. The emergency spillway lining shall extend to the toe of the embankment on the exterior of the berm, and shall extend to an elevation of three feet below the spillway crest on the interior of the berm. [Ord. 2010-03-01]

I. The minimum freeboard through the emergency spillway shall be one foot and the maximum spillway length shall not exceed 75 feet.

J. All portions of the detention basin bottom shall be sloped towards the outlet structure at a minimum slope of 2%.

K. The minimum basin berm width at the design elevation shall be 10 feet. A cutoff trench (keyway) of impervious material shall be provided under all embankments that require fill material. The cut-off trench shall be a minimum of eight feet wide, three feet deep and have side slopes of one horizontal to one vertical.

L. For all detention basins, the permanent outlet control structure shall be a Type "M" inlet grate and box. The inlet grate shall only be used as an emergency outflow and the grate elevation shall be equal to or higher than the one-hundred-year water surface elevation, but at least six inches below the emergency spillway elevation.

M. Two anti-seep collars shall be installed around the basin outlet pipe and shall be centered within the normal saturation zone of the berm. The antiseep collars and their connections to the pipe barrel shall be watertight.

N. Detention basins shall be installed before the construction of any buildings or site improvements, unless otherwise approved by the Board and the Bucks County Conservation District. A preliminary basin as-built plan must be submitted and approved by the Township Engineer prior to beginning any building construction to confirm that the constructed volumes are in accordance with the design plans. A note confirming this shall be included on the record plan and in the sequence of construction. [Ord. 2010-03-01]

O. If a detention basin will serve as a temporary sedimentation basin, the temporary control measures shall be shown for the basin as required by PennDOT, Chapter 102 Regulations, as amended. Temporary sediment basins shall be in place prior to any earth moving activities within their tributary drainage areas.

P. Energy dissipating devices (cable concrete/rip rap, or equivalent) shall be provided at all discharge points. Bethlehem Precast Cable Concrete CC-20, or approved equal, shall be required where a basin outlet pipe is discharged along or within a public road right-of-way.

Q. Basins shall be screened and landscaped in accordance with the Landscape Planting requirements of this Chapter.

R. Where a retention basin is proposed, the applicant shall demonstrate the retention basin is designed to protect the public health, safety and welfare. At a minimum, the retention basin design shall include a 10 foot wide safety ledge, a clay liner, a four foot permanent pool depth, wet-tolerant plantings, cutoff trench, two fountain aerators with locked controls, the location of power source, and specifications for embankment construction and soil testing. The above criteria shall be specified in a retention basing cross section detail. [Ord. 2010-03-01]

S. Underground detention basins may be utilized for stormwater management, when approved by the Board. When approved, the underground detention basins shall be designed in accordance with the following criteria:

(1) Underground detention basins shall be located outside all public rights-of-way.

(2) Underground detention basins shall be constructed of high density corrugated polyethylene pipe, or approved equal. The required volume shall be provided utilizing only underground pipe capacity. Each pipe shall have a minimum slope of 0.5%.

(3) Inlets or storm manhole structures with steps shall be located at each corner of the underground detention basin to provide access for maintenance.

(4) A minimum of one-foot of freeboard shall be provided between the one hundred-year water surface elevation and the top of all inlet grates or manhole rims.

(5) An emergency overflow weir shall be provided for the outlet structure in order to convey basin inflow in excess of design flows or in the event the outlet structure becomes blocked and is unable to convey the design flow. The minimum capacity of the emergency overflow weir shall be equivalent to the one-hundred-year peak inflow rate for the post-development design storm.

(6) Proposed site improvements and grading downstream of the underground detention basin shall be designed to convey the one-hundred year peak inflow rate to a natural outfall, storm sewer system or other drainage facility, without adversely affecting downstream properties.

(7) As-built plans shall be provided for any underground detention basin to verify it was constructed in accordance with the approved plan prior to backfilling of the basin. A note to this effect shall be included on the record plan and in the sequence of construction. [Ord. 2010-03-01]

5. Storm Sewer.

A. All storm sewer systems shall provide the required capacity for the onehundred-year design storm based on the Rational Method, as determined by the PennDOT Design Manual, Part 2, as amended, and the U.S. Department of Commerce, Hydraulic Design Series No. 5, Hydraulic Design of Highway Culverts, as amended. Storm sewer systems located along a Township road or State highway shall also be designed to convey the one hundred-year peak flow rate.

B. Rainfall intensity values found in the PennDOT Design Manual Part 2, as amended, shall be used for calculating peak flow rates.

C. Consideration shall be given to future land use changes in the drainage area in selecting the "C" coefficient. For drainage areas containing several different types of ground cover, a weighted value of "C" shall be used. Runoff coefficient values for the design of storm sewer systems shall be as follows:

Description of Area	**Runoff Coefficient (C)**
Impervious (pavement, concrete, stone)	0.95
Lawn or unimproved areas	0.40
Meadow	0.30
Woods	0.25
Residential, 2 acre lots	0.50
Residential, 1 acre lots	0.60
Residential, ¼ acre lots	0.70
Townhouses, Multifamily Units, Village Homes	0.80

D. Storm Duration.

(1) In determining the peak flow rate to individual storm sewer inlets, headwalls (or other collection structures), a 5-minute time of concentration shall be used if the time duration does not result in a maximum expected discharge that exceeds the capacity of a thirty-inch diameter pipe.

(2) If a 5-minute time of concentration results in a pipe size exceeding 30 inches, the time of concentration approach found in the PennDOT Design Manual Part 2, as amended, shall be used in determining the storm duration.

(3) If a 5-minute time of concentration results in a pipe size exceeding 30 inches, within any run of pipe, the time of concentration approach found in the PennDOT Design Manual Part 2, as amended, may be used for sizing of pipes from that point on, by adjusting the time of concentration.

E. Storm sewer shall be reinforced concrete pipe with a minimum diameter of 15 inches or equivalent. Storm sewer located outside a public ultimate right-of-way or easement shall be high density corrugated polyethylene. [Ord. 2010-03-01]

F. Storm sewer shall be installed with a slope such that a minimum full-flow velocity of two feet per second will be attained; however, the slope shall not be less than 0.50%. No pipe shall exceed a slope that will permit full-flow velocity in excess of fifteen-feet-per-second.

G. The top of all storm sewer piping shall be at least six inches below the grade elevation of the pavement stone sub base. For storm sewer located in pervious areas, the top of pipe elevation shall be a minimum of one foot below the finished grade elevation.

H. A minimum of one foot of freeboard shall be provided between the one hundred-year water surface elevation and the top of inlet grate or manhole rim.

I. When there is a change in storm sewer size at an inlet or manhole structure, the top of pipe elevations shall be the same. For equal storm sewer sizes, a minimum of two inches shall be provided between the inlet pipe and the outlet pipe invert elevations.

6. Inlets.

A. All inlets to be utilized in a storm sewer system shall conform to the design standards of the most current PennDOT Publications 408 and 72 (Road Construction Standards).

B. Inlets to be utilized within a public right-of-way shall be Type “C” or Type “M,” with standard concrete top unit and “bicycle safe” structural steel grate.

C. Inlet spacing in paved areas shall be arranged so that a minimum of 80% of the gutter flow tributary to the inlet will be captured. The designer shall be required to verify that bypass surface runoff from the one-hundred-year design storm will enter the storm sewer piping system at some point, prior to discharge into a detention basin or other approved outlet point. Inlets shall be spaced so that the accumulation of surface bypass runoff and surface runoff

tributary to an individual inlet will not exceed other design requirements specified in this Chapter. Inlet capacity shall be based on inlet efficiency curves provided in PennDOT Design Manual, Part 2, as amended.

D. Storm sewer inlet spacing shall not exceed 300 feet.

E. At street intersections, inlets shall be placed at the curb tangent and not in the curved portion of the curb. At least one inlet shall be required at the curb tangent on the upstream side of all access drive and driveway intersections with public roadways.

F. The capacity of inlets shall be based on a maximum surface flow to the inlet of four cubic feet per second. The maximum flow to inlets located in low points of paved areas (such as sag vertical curves) shall include the overland flow directed to the inlet, as well as the cumulative bypass surface runoff from inlets upstream. The bypass runoff from each upstream inlet shall be calculated using inlet efficiency curves found in the PennDOT Design Manual Part 2, as amended.

G. An inlet at a low point of a paved area may be designed to accept a maximum of six cubic feet per second. Type "M" inlets shall be designed to accept a maximum surface flow of six cubic feet per second, unless otherwise approved by the Township Engineer. Double inlets will not be permitted where additional pipe and inlets can be placed upstream to intercept the excessive surface flow. A maximum of eight cubic feet per second shall be permitted to be collected by an inlet located in an isolated pervious area, provided the designer can verify such an inlet would not cause stormwater to accumulate outside of the associated storm sewer easement, and that the depth of the water would not exceed 12 inches.

H. Curbed Sections. The maximum encroachment of runoff on the roadway pavement shall not exceed ½ of the traveled lane during a twenty-five-year design storm of five-minute duration. Inlets shall be provided to control the encroachment of water on the travel lane.

7. Manholes.

A. All storm sewer manholes to be utilized in a storm sewer system shall conform to the design standards of the most current PennDOT Publications 408 and 72 (Road Construction Standards).

B. Storm sewer manhole spacing shall not exceed 300 feet.

C. Storm sewer manholes located within public rights-of-way, the manhole covers shall have the word "STORM" cast in 2-inch high letters.

8. Headwalls and Endwalls.

A. All headwalls and endwalls to be utilized in a storm sewer system shall conform to the design standards of most current PennDOT Publications 408 and 72 (Road Construction Standards).

B. A Type "DW" Endwall shall be provided at the termination of all storm sewer systems, unless conditions warranted an alternate type approved by PennDOT and/or the Board.

C. A headwall shall be required (instead of an inlet) where calculated surface flows exceed the requirements for inlets in pervious areas. Headwalls/endwalls with a height greater than three feet may be required to have a safety fence or guide rail.

D. Rock apron or other approved velocity dissipation devices shall be placed at all headwalls and endwalls to reduce flow velocity and prevent erosion.

9. Overflow System. An overflow system shall be provided to carry all bypass flow and/or flow in excess of storm sewer design capacity, to the detention basin (or other approved outlet point) when the capacity of the storm sewer system is exceeded. Stormwater runoff will not be permitted to discharge from any storm sewer structures.

10. Drainage Swales.

A. All drainage swales located within a site, or along a Township road or State highway, shall be designed to convey the one-hundred-year peak flow rate, as determined by the Rational Method.

B. The maximum velocity, as determined by Manning's equation, shall not exceed the allowable velocities as found in the PADEP, Erosion and Sediment Control Program Manual, as amended.

C. All vegetated channels shall have maximum side slopes of four horizontal to one vertical and a minimum centerline slope of 2%.

11. Bridges and Road Culverts.

A. Bridges and culverts shall be designed and constructed to meet current PennDOT construction and loading standards (HS-25 loading standards). They shall be constructed to the full width of the right-of-way or to an adequate dimension to accommodate special grade conditions.

B. All bridges and culverts located within a site, or along a Township street or State highway, shall be designed to convey the one-hundred-year peak flow rate without increasing the extent and depth of the one-hundred-year flood plain, as determined by the Rational Method.

C. When pipe capacity and/or limited grade elevations warrant utilization of multiple pipes, a box culvert shall be utilized in lieu of the multiple pipes.

D. Bethlehem Precast Cable Concrete CC-20, or approved equal, shall be required at the upstream and downstream ends of all bridges and culverts.

12. Access Drive and Driveway Culverts.

A. All proposed access drives and driveways, where curbs and storm sewer is not required by the Board, shall have a culvert with flared end sections or endwalls.

B. The minimum culvert size shall be 15 inches, or equivalent and constructed of reinforced concrete pipe.

C. The minimum culvert length shall be 24 feet, with pipe extension at least five feet beyond the edge of the paving.

D. Where an existing roadside drainage swale is too shallow to permit installation of a driveway pipe, the Board may approve the use of a concrete trench box with grate.

13. Drainage Easements, Ownership and Maintenance. Drainage easements, ownership and maintenance responsibilities for all stormwater management facilities shall be as follows:

A. Detention Basin Easement.

(1) When any detention basin is proposed within a subdivision and/or land development, an easement description of the facility, access to facility, and the terms of the ownership and required maintenance, shall be incorporated on the site plan.

(2) An easement and stabilized access to a detention basin shall be provided for maintenance and operation. This access easement shall be cleared and shall be a minimum of 20 feet in width. Access to detention basins shall be constructed of interlocking grass paving system and backfilled with topsoil and seeded. The access shall be a minimum of 12 feet in width and be no steeper in slope than 12 horizontal to one vertical. In addition, depressed curb and concrete driveway apron shall be provided where the access enters a road or access drive. Access easement shall be owned and maintained by the individual lot owner or homeowners association.

B. Storm Sewer and Drainage Swale Easements.

(1) Easements shall be a minimum of 20 feet in width and shall be provided to accommodate required storm sewer facilities and drainage

swales. No other utilities shall be located within a storm sewer easement, unless approved by the Township.

(2) On private property, the individual owner or homeowners association shall maintain the easement area, including ground cover, fencing and/or landscaping.

C. Stormwater Maintenance Agreement.

(1) When an applicant retains ownership of any stormwater management facility, such entity shall be responsible for repair and maintenance of the facility. The site plan shall contain a notation permitting access to such facilities deemed critical to public welfare, for inspection at any reasonable time by the Township or its designee.

(2) The site plan shall also contain a notation that states the approval of the final plans is conditioned upon the applicant agreeing to be responsible for all repairs and maintenance of the stormwater management facility, and permitting access to such facilities deemed critical to public welfare, for inspection at any reasonable time by the Township or its designee. This Stormwater Maintenance Agreement shall be in writing, as prepared by the Township Solicitor, for recording. The failure of the applicant to properly maintain any stormwater management facility shall be construed to be a violation of this Chapter and shall be declared to be a public nuisance, subjecting the violator to any and all penalties provided by law.

D. Stormwater Management Facility Maintenance Fees. The Township shall require payment of a fee in order to maintain the stormwater management facilities. The fee shall apply to all storm sewers located in public rights-of-way or any easement owned by the Township. The amount of the fee shall be set by Township resolution.

(Ord. 2002-05-02, 5/20/2002, §712; as amended by Ord. 2007-04-01, 4/26/2007; and by Ord. 2010-03-01, 3/22/2010, §§XV–XVII)

§22-713. Landscape Planting.

1. Purpose. It is the purpose of these planting requirements to conserve existing healthy plant communities such as woodlands and to require new landscape plantings in critical areas of new developments in order to:

A. Reduce soil erosion and protect surface water quality by minimizing stripping of existing woodlands or tree masses.

B. Reduce stormwater runoff velocity and volume by providing planting areas where stormwater can infiltrate.

C. Improve air quality by conserving existing or creating new plantings, which produce oxygen and remove carbon dioxide from the atmosphere.

D. Conserve historically, culturally or environmentally sensitive landscapes such as wooded hillsides, scenic views, and natural areas, while enhancing the aesthetic appearance of the Township and community.

E. Provide planted buffers for subdivisions and/or land developments, which act to visually integrate a development into the existing landscape.

F. Improve the environment for pedestrians along streets, parking areas and other pedestrian areas.

2. Preservation and Protection and Existing Vegetation.

A. All subdivisions and/or land developments shall be laid out in such a manner as to minimize the removal of healthy trees and shrubs on the site. If required by the Township, the applicant shall produce evidence from a qualified professional that no alternative layouts are possible that would reduce the loss of individual trees, vegetated areas and woodlands.

B. Protection of Existing Vegetation. Each individual tree, vegetated area and woodlands designated "TO REMAIN" shall be made part of the Tree Protection Zone as required in the Township Zoning Ordinance [Chapter 27] and shall be protected in the field prior to any clearing or earthmoving activities in accordance with the following:

(1) A four-foot high, orange construction fence shall be erected a minimum of one foot outside the dripline on all sides of individual trees and woodlands and along the entire perimeter of vegetated areas to remain.

(2) The tree protection fence shall be placed to prevent disturbance to or compaction of soil inside the area to remain until construction is complete.

(3) The limits of clearing and location of tree protection fence shall be shown on the landscape plan.

(4) The site plan shall contain a plan notation stating the Township Engineer shall inspect and approve the tree protection fence installation prior to any clearing or earthmoving activities.

(5) The site plan shall contain plan notations stating that, in the opinion of the Township Engineer's representative or certified arborist, any trees disturbed, damaged or killed during or as a result of construction shall be replaced at a one caliper inch for one caliper inch. [Ord. 2010-03-01]

C. Alteration of existing drainage patterns and water supply for the protected trees and vegetation shall be minimized.

D. If an applicant encroaches into a designated tree protection zone resulting in the damage or destruction of existing trees and/or vegetation designated to remain, the applicant shall be responsible for replacing the damaged or destroyed vegetation on an equivalent caliper basis. The caliper of all the trees damaged or destroyed shall be added together, and the applicant shall be required to plant new trees, with a minimum caliper of three inches, whose cumulative caliper equals or exceeds that of the damaged or destroyed trees. The replacement trees shall be selected from the Township's List of Required Plant Material listed in the Appendix and shall be planted not less than 20 feet on center. In addition, the applicant shall be required to replace any damaged or destroyed shrubs or ground cover, with plant material of equivalent type, size and shape. Any new replacement trees or plant material shall be guaranteed for one year or until the end of the eighteen-month maintenance period for the project, whichever is greater.

3. Parking Area Landscaping.

A. Planting Islands. All ten-foot by thirty-six-foot planting islands shall contain two shade trees and all ten-foot by eighteen-foot planting islands shall contain one shade tree.

B. Planting Strips. Planting strips shall be a minimum of 10 feet wide, and shall run the length of a parking row. Planting strips shall contain one shade tree at intervals of every 25 feet on average.

C. All planting islands and strips shall be underlain by soil, not stone or bituminous material, and shall be graded not to exceed a slope of five horizontal to one vertical.

D. The placement of light standards shall be coordinated with the landscape plan to avoid a conflict with the effectiveness of light fixtures.

E. Shade trees shall be selected from the List of Required Plant Material contained in the Appendix.

F. All required parking area trees shall be in addition to any parking area trees required by the Zoning Ordinance [Chapter 27].

4. Street Trees.

A. Street trees shall be planted every 30 feet along all proposed streets and existing streets when they abut or lie within the proposed subdivision and/or land development.

B. Street trees shall be planted between three and five feet outside the ultimate right-of-way line, and as an alternative, the same quantity of trees may be planted in an informal arrangement along the perimeter of the street, when approved by the Board.

C. Street trees shall be selected from the List of Required Plant Material listed in the Appendix.

5. Landscaped Buffers and Screens.

A. All subdivisions and/or land developments shall comply with the buffer yard requirements of the Township Zoning Ordinance [Chapter 27].

B. Landscaped buffers and screens shall be required for proposed land developments to screen or delineate the following site elements:

(1) Off-Street Parking Areas. One deciduous or evergreen shrub planted every five feet along the perimeter of the parking area.

(2) Trash Collection Areas and Mechanical Units. A minimum six-foot wooden shadow-box fence, or approved equal, on at least three sides, with a staggered row of evergreen trees planted every 10 feet along the fence perimeter.

(3) Detention/Retention Basins. One deciduous or evergreen tree planted every 20 feet, plus one deciduous or evergreen shrub every 10 feet along the basin perimeter, planted in an informal arrangement.

(4) Outdoor Storage Areas. A minimum six-foot wooden shadow-box fence, or approved equal, on at least three sides, with evergreen trees planted every 10 feet along the fence perimeter.

(5) Public or Private Sewage Pump Stations and Treatment Plants. A minimum six-foot wooden shadow-box fence, or approved equal, on all sides, with a staggered row of evergreen trees planted every 10 feet along the fence perimeter.

(6) Multifamily Residential Units. A berm varying in height from three to five feet, with one ornamental or evergreen tree for every 20 feet, plus one deciduous or evergreen shrub for every 10 feet, planted in an informal arrangement along the perimeter of the property being subdivided. The maximum side slopes of the berm shall be four horizontal to one vertical.

(7) Active Recreational Areas and Facilities. A berm varying in height from three to five feet, with one ornamental or evergreen tree for every 20 feet, plus one deciduous or evergreen shrub for every 10 feet, planted in an informal arrangement along the perimeter of the property being subdivided. The maximum side slopes of the continuous berm shall be four horizontal to one vertical. The Board may require fencing depending on the type of proposed recreational facilities and/or adjacent land uses.

(8) Easements. The boundary of a pedestrian or vehicular access easement, when located on, or adjacent to, a lot shall have a method of physical delineation on both sides consisting of six-foot arborvitaes, planted nine feet on center, with four-foot-high split-rail fence.

C. Site elements not included in the above list having similar visual impact shall be screened in accordance with requirements for the most similar elements as determined by the Township.

D. Landscape plantings shall be selected from the List of Required Plant Material in the Appendix.

6. Plant Materials, Specifications, Maintenance, and Guarantee. The following standards shall apply to all plant materials or transplanted trees as required under this Chapter:

A. General Requirements. The location, dimensions and spacing of required plantings should be adequate for their proper growth and maintenance, taking into account the sizes of such plantings at maturity and their present and future environmental requirements, such as wind, soil, moisture and sunlight. Plantings should be selected and located where they will not contribute to conditions hazardous to public safety.

B. Plant Specifications. All plant material shall meet the minimum standards for health, form, and root condition as outlined in the American National Standards Institute (ANSI) Z60.1–1996, as amended. All plant material shall be hardy and within the United States Department of Agricultural (USDA) Hardiness Zone 6, applicable to Bucks County, Pennsylvania.

C. Installation. All shade and evergreen trees shall be supported with stakes and guy wiring in accordance with The American Nursery and Landscape Association (ANLA) Standards. The backfill for excavated planting areas shall be composed of native topsoil and shall be mulched six inches beyond the dripline.

D. Maintenance and Guarantee. The landscape plan shall contain plan notation stating that the applicant is required to maintain and guarantee all plant material until the end of the eighteen-month maintenance period. Any plant material that is deemed, in the opinion of the Township Engineer, not to have survived or not to have grown in a manner characteristic of its type, shall be replaced within the eighteen-month maintenance period.

(Ord. 2002-05-02, 5/20/2002, §713; as amended by Ord. 2010-03-01, 3/22/2010, §XVIII)

§22-714. Lighting.

1. Purpose. It is the purpose of these requirements to regulate the design, placement, orientation and distribution of lighting in order to:

   A. Provide lighting of facilities to protect public health, safety and welfare.

   B. Control glare from parking areas and protect the privacy of adjacent properties.

   C. Provide lighting for safe vehicular and pedestrian movements.

   D. Limit spacing, fixture type and height of lighting to lessen light pollution.

   E. Promote efficient design and construction with regard to energy conservation.

2. Applicability. Lighting shall be required for all public streets, parking areas, loading facilities, access drives, nonresidential buildings, multifamily subdivisions, recreational facilities, other public facilities and at any other locations deemed necessary by the Board.

3. Public Streetlights.

   A. Residential Streets. Public streetlights shall be required for all residential subdivisions at the following locations:

      (1) All street intersections, cul-de-sac bulb radii and along horizontal street curves, at locations approved by the Board.

      (2) At any existing street intersection abutting the proposed subdivision, where required by the Board.

      (3) Multifamily parking areas with sufficient lights to meet the minimum illumination levels and uniformity ratio specified in this Chapter.

      (4) Any other location where lighting will improve the function of the street, sidewalk or pedestrian access way, where required by the Board.

   B. Nonresidential Streets. Public streetlights shall be required for all nonresidential subdivisions at the following locations:

      (1) Along all proposed streets with sufficient streetlight spacing to meet the minimum illumination levels and uniformity ratio specified in this Chapter.

      (2) All street intersections and along cul-de-sac bulb radii.

(3) Any existing street intersection abutting the proposed subdivision, where required by the Board.

(4) Any other location where lighting will improve the function of the street, sidewalk or pedestrian access way, where required by the Board.

C. Prior to the submission of Final Plans, the applicant shall submit a petition to create a streetlight district to the Township.

D. The site plan shall contain a plan notation stating, "All streetlights shall be installed and energized prior to the issuance of the first occupancy permit for any subdivision and/or land development or first phase or section thereof and the lighting and maintenance costs shall be assessed to affected property owners on a per lot basis."

E. The applicant shall be responsible for all costs involved in lighting the streets until such time that the Township accepts the streets for dedication.

F. Streetlight Specifications.

(1) The construction of streetlights shall be in accordance with the standards and specifications of the National Electric Code. All provisions and regulations of the electric supplier and the Township shall also apply.

(2) Where streetlights are installed at intersections, the applicant shall install combination street name signs and streetlights.

(3) The Site Plan shall contain a plan notation stating that unless otherwise approved by the Township, a maximum of two connections to the electric supplier's power source shall be permitted by the applicant.

(4) All lighting fixtures shall be controlled by automatic photocells to regulate lighting between dawn and dusk.

(5) The streetlight fixture and pole design shall be in accordance with the detail listed in the Appendix.

4. Parking Areas and Loading Facilities.

A. Lighting of parking areas, including access drives and loading facilities, shall meet the minimum illumination levels and uniformity ratio specified in this Chapter.

B. Light standards shall be a maximum of 20 feet in height, and have a concrete base raised 30 inches above finished grade.

C. Light standards shall be located in planting islands or planting strips within parking areas. Light standards shall not be installed directly on the parking area surface.

D. All lighting fixtures shall be controlled by automatic photocells to regulate lighting between dawn and dusk.

E. All electrical power lines to lighting fixtures shall be underground.

F. Glare Control.

(1) The maximum light intensity measured at any point along the property line shall be 0.2 footcandles.

(2) All lighting fixtures shall meet all applicable IESNA cutoff criteria.

(3) All lighting shall be effectively shielded and directed towards the interior of the parking area away from adjacent properties.

(4) Illuminated signs shall have a shielded lighting source and shall be directed away from all street rights-of-way.

5. All other lighting required by this Chapter for recreational facilities, sidewalks, pedestrian walkways, trails, crosswalks, bicycle lanes, etc., may be approved by the Board in accordance with the recommended practices and standards of the IESNA.

6. The applicant shall submit three copies of an as-built lighting plan to the Township to verify existing light intensities and uniformity are in accordance with the approved final plans.

7. Where required by this Chapter, illumination levels shall have intensities and uniformity ratios in accordance with recommended practices of the IESNA handbook RP-20-98 and IESNA Handbook RP-8-00, as amended, and in accordance with the minimum standards listed below:

Description of Use/Area	**Maintained Footcandles**	**Uniformity Avg.: Min.**
High Activity Nonresidential Parking, Loading Facilities and Drives (e.g., Retail, Office)	0.9 Minimum	4:1
Medium Activity Nonresidential Parking, Loading Facilities and Drives (e.g., Industrial, Institutional)	0.4 Minimum	4:1
Multifamily Residential Parking	0.2 Minimum	4:1
All Nonresidential Subdivision Streets	0.9 Average	6:1

Description of Use/Area	Maintained Footcandles	Uniformity Avg.: Min.
Pedestrian Walkways, Bike Lanes, Trails	0.2 Average	5:1
Building Entrances	2.0 Average	–

(Ord. 2002-05-02, 5/20/2002, §714)

§22-715. Park and Recreation Land.

1. Purpose. All residential subdivisions and/or land development plans regulated under this Section shall provide for suitable and adequate recreation land and/or fees as set forth in this Chapter in order to:

   A. Ensure acquisition, development and maintenance of adequate recreation areas and facilities to serve the people that live and/or work in the Township, and to serve the future residents of the Township.

   B. Maintain compliance with recreational guidelines as recommended by the Township Park and Recreation Advisory Board and the guidelines and recommendations of the National Recreation and Park Association.

   C. Coordinate existing recreational areas with future recreational areas.

   D. Enhance existing recreational areas and facilities to enable them to be supportive of future development.

   E. Ensure that dedicated park and recreation land is suitable for the intended use.

   F. Provide for the orderly acquisition and development of additional park and recreation areas.

2. Park and Recreational Land Dedication Requirements.

   A. The applicant shall dedicate land to the Township (or other entity as may be approved by the Board) suitable for park and recreation use, unless one of the alternatives set forth in this Section is approved by the Board. Land to be dedicated shall be dedicated prior to recording the final plans.

   B. In zoning districts other than the WS District, this land shall be in addition to any open space that is set aside as part of a development that requires open space.

   C. The amount and location of land to be dedicated to the Township shall bear a reasonable relationship to the use of the park and recreational facilities by

future residents of the Township. To that end, the following minimum criteria apply:

(1) Residential Subdivision and/or Land Development: The amount of land to be dedicated for park and recreation areas in all residential subdivisions, or land developments of single-family, attached or multi-family configuration, shall be 2,500 square feet per new dwelling unit.

(2) Nonresidential Subdivision and/or Land Development: The amount of land to be dedicated for park and recreational areas shall be 2,500 square feet per 4,000 square feet of building area (herein defined as the area occupied by buildings to the extremities of all roof lines).

D. The land dedicated to the Township for park and recreation purposes need not be a part of the land development or subdivision. It may be located on a separate parcel of land provided that the Board in its sole discretion determines that the land so dedicated is appropriate in the particular circumstances.

E. In the event of a conflict between the Zoning Ordinance [Chapter 27] and this Chapter to the amount of recreational areas that shall be dedicated, this Chapter shall control.

F. Where an applicant dedicates land, the acquisition value of the land and any improvements being placed on the land for park and recreation purposes shall equal or exceed the fee-in-lieu of dedication as established from time to time by resolution of the Board. If the value of the fee-in-lieu of dedication is not met or exceeded, the applicant shall supply the balance of the obligation in cash or additional land or improvements as the Board may agree to.

G. Alternative to Dedication.

(1) Dedication and Improvement of Off-Site Land. The land to be dedicated to the Township for park and recreation purposes need not be a part of the land development or subdivision. It may be located on a separate parcel of land, provided that the Board in its sole discretion determines that the land being dedicated is accessible to the subdivision and/or land development or for the general use of residents of the Township.

(2) Fee-In-Lieu of Dedication.

(a) Where, upon agreement with the applicant, it is determined that the dedication of all or any portion of the land area required for park and recreation purposes is not feasible because of the size, shape, location, access, topography or other features of the land or any other need of the Township, the applicant

shall pay to the Township a fee-in-lieu of dedication of any such land. The fee shall not apply to any existing dwelling units involved in the subdivision and/or land development.

(b) The amount of the fee shall be specified in the schedule of fees adopted by resolution by the Board.

(c) Fees required under this Section shall be paid prior to the recording of the approved final plan or as determined by the Board. In the case of a phased development, fees shall be paid prior to the recording of the approved final plan for each phase.

(3) Recreation Fee Districts. The fees shall be recorded to one of the recreation fee districts to ensure that the lands and facilities are accessible to the residents of the development(s) that paid fees towards their cost. The Recreation Fee District Map in this Appendix designates "Recreation Fee Districts." Any fees collected under this Chapter shall be expended only within the same Recreation Fee District as the subdivision and/or land development that contributed the fees, except that fees from any district may be used for Township-wide community parks and recreation areas.

3. Criteria for Location and Suitability of Park and Recreation Land Dedication.

A. The Township Planning Commission and the Board in exercising their duties regarding the review of subdivision and/or land development plans shall consider the recommendation of the Township Park and Recreation Advisory Board as well as the following criteria in determining where to approve the proposed plan for use and location of the proposed park and recreation area:

(1) The land proposed for dedication shall be easily and safely accessible, have good ingress and egress, and have access to an external public road or to a road to be dedicated as a public road to which the general public has access. However, if the subject land is being dedicated to a homeowners association, the access may be from an internal road.

(2) The geometry of the land being dedicated shall be as close to square as reasonably possible. The size and shape of the site(s) shall be suitable for the development as a recreation area and the configuration of the site(s) shall be able to accommodate recreation activities proposed by the development plans. The area shall not include narrow or irregular pieces of land, which are remnants from subdividing or the design of streets or parking areas.

(3) If a tract to be subdivided or developed abuts an existing Township park, open space, or conservation easement, the park and recreation land to be offered for dedication shall be adjacent to such existing

Township land or be connected by public access easement and trail constructed by the applicant.

(4) Site(s) shall have suitable topography for the development as a particular type of active or passive recreation area. Suitability shall be determined by the Board upon recommendation of the Township Engineer and shall be judged on the basis of the type of recreation area proposed. However, the following minimum restrictions apply: No more than 25% of the area shall be floodplain or areas with slopes above 8%, or both.

(5) Site(s) designated for active recreation land shall not include any of the following:

(a) Land with natural resources restrictions, as defined by the Township Zoning Ordinance [Chapter 27].

(b) Stormwater Detention Facilities. Stormwater retention basins may be approved by the Board if the resulting body of water is integrated into the landscape and the area can be used by the residents for active recreational activities.

(c) Land designated for any other purpose, such as lots, streets or parking areas.

(6) Site(s) designated for passive recreation may contain lands with natural resource restrictions; provided, that the land can be used by residents for passive recreational activities.

(7) The development plans and recorded plans shall show:

(a) The recreational activities and/or facilities for which an area is intended.

(b) The legal basis by which the recreational, park or open space use is preserved.

(8) Recreation areas shall not be traversed by utility easements unless said utilities are placed underground, and no part of them or their supportive equipment protrudes above ground level.

(9) Onsite improvements on the dedicated park and recreation land shall be commensurate with the adjacent onsite development improvements, including but not limited to grading, curbing, utilities and walking paths.

(10) Land shall comply with all other applicable requirements of the Township Zoning Ordinance [Chapter 27] (including minimum lot size) and this Chapter.

B. Ownership and Dedication to the Township.

(1) If the Board determines that a park and recreation land dedication is in the public interest, such park and recreation land shall first be offered for dedication to the Township.

(2) If the Township does not accept dedication, the land may be owned and maintained by an entity that the Board determines is acceptable to ensure proper long-term oversight and maintenance of the land. The approved entity must agree to accept such land for permanent park and recreation purposes, in compliance with the following:

(a) The land may be dedicated to a formal homeowner or condominium association, upon approval of the Board. Site plan shall contain a plan notation stating, "If any entity responsible for such park and recreation land should dissolve, upon demand by the Township, the land shall revert to the Township at no cost to the Township."

(b) The land may be dedicated to the State or County government, or other public entity, as approved by the Board.

(3) If the Board determines that a park and recreation land dedication is in the public interest, acceptance of the dedication shall be by adoption of a resolution of the Board and acceptance of a deed of dedication in a form acceptable to the Township Solicitor.

(4) Deed restrictions and/or easements in favor of the Township shall be required on all park and recreation land to ensure its permanent use for park and recreation purposes and to prohibit the construction of buildings on the land, except buildings for noncommercial recreation or to support maintenance of the land. Deed restrictions and easements shall be approved by the Board, upon recommendation of the Township Solicitor and Township Engineer.

4. Review by the Planning Commission. For preliminary and final plans, the Planning Commission shall review the plan for conformance to this Section and may on its own motion require formal review by the Park and Recreation Advisory Board, which shall promptly review if so requested.

(Ord. 2002-05-02, 5/20/2002, §715)

§22-716. Survey Monuments and Markers.

1. All monuments and markers shall be set and certified by a professional land surveyor. All monuments and markers shall be set within .04 of a foot from its required location.

2. A concrete monument shall be accurately placed at the following locations:

   A. At all outbound existing property corners, including changes in direction of boundary.

   B. At all proposed lot corners, including changes in direction of boundary, if the lot size is greater than two acres.

   C. Along both sides of a street ultimate right-of-way line at all intersections, curves and changes in direction if right-of-way.

   D. At the beginning and end of all easements, including changes in direction of easement.

   E. Along the external boundary of all areas to be preserved as open space, agricultural areas or deed-restricted areas, including changes in direction of boundary and intersections with right-of-way lines.

   F. At such other places along a street right-of-way line that may be necessary to define a future street extension.

3. Where one of the above locations along the street right-of-way line is a point common to a property corner, the concrete monument shall be set in lieu of a marker.

4. Any existing concrete monument that is found and identified to be an existing property corner shall remain undisturbed.

5. Markers shall be set at all lot corners, changes in direction and intersections with the ultimate right-of-way line, unless a concrete monument is required.

6. Monuments and markers shall be set prior to acceptance of dedication of any public improvements by the Board.

(Ord. 2002-05-02, 5/20/2002, §716)

§22-717. Utilities.

1. Except for electric and natural gas transmission lines, all electric, natural gas, telecommunication, cable television and any other utility lines shall be placed underground in all subdivisions and/or land developments.

2. Utility lines shall be placed underground within the street right-of-way, or in appropriate easements at locations approved by the Board. Each shall have the necessary shutoff valves and other safety requirements normally associated with safe operations. All utility connections shall be appropriately capped for safety purposes whenever a lot or building is not occupied.

3. All underground utilities shall be installed prior to street paving at locations approved by the Township, and shall be located as much as possible between the curb or edge of cartway and the edge of the sidewalk.

4. All above ground utility boxes, transformers, junctions, cable "dog houses" and the like shall be located only in areas designated for same.

(Ord. 2002-05-02, 5/20/2002, §717)

§22-718. Public Water Supply.

1. Purpose. These regulations are to ensure that each residential dwelling unit and nonresidential building to be served by a public water supply shall have an adequate supply of potable water.

2. A public water supply system shall be required and approved by the Township in accordance with the uses permitted in the applicable zoning district for the following:

   A. All multifamily subdivisions and mobile home parks.

   B. Industrial, office, commercial or institutional developments including, but not limited to, hospitals, schools, churches, retirement villages, life care facilities and group homes.

3. The applicant shall construct sufficient water mains to make service available to each lot, building or dwelling unit in the subdivision and/or land development. The system shall be designed to comply with the standards and requirements of the applicable water authority and shall be subject to its approval.

4. Fire Protection. The public water supply system shall be designed with adequate capacity and fire hydrants for fire fighting purposes. The water system, including the location of all fire hydrants, shall be reviewed by the Township Fire Marshal's office and approved by the Board.

(Ord. 2002-05-02, 5/20/2002, §718)

§22-719. Private On-Lot Water Supply.

1. Purpose. These regulations are to ensure that each residential dwelling unit and nonresidential building to be served by a private on-lot well shall have an adequate supply of potable water.

2. Where public water supply is not available within 100 feet of the property boundary, and a public water supply is not required for the proposed use by the Zoning Ordinance [Chapter 27], the applicant shall construct a well on each proposed lot, which services only one lot or unit.

3. No applicant shall withdraw groundwater for any purpose by use of a well except as permitted by this Chapter.

4. No permit for a residential or nonresidential building, or addition to a building, which is to be served by a well, shall be issued unless the well intended to serve the building has been constructed and tested in accordance with this Chapter.

5. A well that does not provide an adequate supply of water for the proposed use, considering both quality and quantity, and/or adversely affects nearby wells or watercourses shall not be approved by the Township.

6. The site plan shall contain a plan notation stating that any proposed well is subject to the provisions of the well construction standards, which includes requirements for well permitting, water quality testing and well production certification.

7. For all residential subdivisions containing three or more lots/units, including the existing lot/unit, and, all nonresidential subdivisions and/or land developments, the applicant shall satisfy the following:

   A. Four copies of a Water Resource Impact Study shall be submitted to the Township with the preliminary plan application. An application for subdivision and/or land development shall be considered incomplete without the required water resource impact study.

   B. A seventy-two-hour pump test is required for the overall site for preparation of the water resource impact study in accordance with the requirements of this Chapter at a location approved by the Township Engineer.

   C. A minimum of four monitoring wells is required for the seventy-two-hour pump test. Monitoring wells should be existing wells located on the site and on nearby properties, as approved by the Township Engineer. If existing wells are not available, or permission from the property owner is not secured, then monitoring well(s) shall be drilled where permissible.

   D. For any subdivision containing 25 or more lots/units, an additional seventy-two-hour pump test shall be required at a different location onsite. Four monitoring wells are required for the second pump test; however, monitor-

ing wells used for the first pump test may be utilized for the second test, when approved by the Township Engineer.

E. The applicant shall execute a Well Depletion Agreement with the Township and post the required financial security prior to recording the final plans.

F. Any existing dwelling units located on a site count towards the lot/unit threshold requirement. All lots and/or properties in existence as of the date of adoption of this Chapter shall be counted towards the lot threshold requirement. The piece-meal subdivision of lots will not result in an exemption from requirements of this Chapter and upon application for the third lot of any property in existence as of the date of the adoption of this Chapter, the requirements of this Chapter shall be mandatory.

8. Water Resources Impact Study.

A. Purpose. These regulations are to ensure that new wells constructed in New Britain Township are able to provide a reliable, safe and adequate supply of water to support the intended use within the capacity of available groundwater resources and to estimate any impacts of the additional water withdrawals on existing nearby wells, underlying aquifers and watercourses.

B. All elements of the pump testing well and water quality analysis shall be completed prior to submission of the water resource impact study. A well construction permit is required for the pumping test well(s) and monitoring well(s) for preparation of the water resource impact study. The location of the pumping test(s) and monitoring well(s) shown on the well permit application shall be reviewed by the Township Engineer prior to issuance of a well permit.

C. A water resources impact study shall be prepared by a professional geologist and/or professional engineer, licensed in the Commonwealth, experienced in the performance of groundwater investigations for water supply wells.

D. The water resource impact study shall be signed and sealed by the person(s) preparing the study and shall include the following information, with respect to the proposed subdivision and/or land development:

(1) Calculations of the projected water demand, including both average and peak daily consumption, using the applicable criteria set forth in the following references:

(a) The adequacy of each residential water supply shall be determined based upon 200 gallons of water per bedroom per dwelling unit per day in accordance with the calculation of household water demand contained in the New Jersey Geological Survey Groundwater Report Series No. 1, Two-Part Pump Test for Evaluating the Water Supply Capabilities of Domestic Wells, as

prepared by Jeffrey L. Hoffman and Robert Canace for the New Jersey Geological Survey, PADEP.

(b) The adequacy of nonresidential water supplies shall be determined based upon the minimum water requirements published in Table IV-1.2 of Part IV of the current edition of the PADEP Public Water Supply Manual. For nonresidential facilities other than those found in Table IV-1.2, the adequacy of nonresidential supplies shall be based upon the flow assumptions published in PA Title 25 Chapter 73 Standards For Sewage Disposal Facilities, Section 73.17(b), or shall be based on actual water meter or sewage meter flow data for facilities of similar type and size. The applicant shall substantiate any meter flow data used to determine the adequacy of nonresidential supplies by submitting copies of water and/or sewer bills for the similar facilities.

(c) Public Water Supply Manual, Bureau of Water Quality Management Publication No. 15, by the Pennsylvania Department of Environmental Protection, Harrisburg, Pennsylvania.

(d) Guide for Determination of Required Fire Flow by the Insurance Services Office (ISO), as amended.

(e) Standards and Manuals for the American Water Works Association, as amended.

(f) In addition to the above, the projected water demand shall include any additional flow required to comply with National Fire Protection Association specifications for sprinkler systems.

(2) A geologic map of the area within a 1-mile radius of the site.

(3) The following information shall be mapped for the area within one-quarter mile radius of all proposed wells. If any existing wells withdrawing over 10,000 gpd are located within 1.0 mile of the site, the mapping radius shall be extended to 1.0 mile.

(a) The location of all faults, lineaments and fracture traces.

(b) The location of all existing and proposed wells.

(c) The location of all existing and proposed on-lot sewage disposal systems.

(d) The location of facilities storing or handling residual or hazardous wastes and substances or petroleum products.

(e) The location of all perennial and intermittent watercourses.

(4) A hydrologic budget shall be calculated for the area within the specified mapping radius, based on the drought recharge capacity of the underlying aquifer and the projected water demand of the proposed well(s) and any existing wells within the required radius from the project location. Based on the results of the hydrologic budget, a determination shall be made on whether or not the potential exists for adverse affects on hydrogeology of the project vicinity, including adjacent wells, springs, surface water or wetlands.

(5) A discussion of the aquifers underlying the site and their long-term drought recharge capability based on accepted published data or detailed site specific investigations.

(6) A narrative describing the design of all on-lot sewage disposal systems and their effect upon groundwater recharge and quality with respect to all proposed and existing water supplies. Available existing groundwater quality data shall be obtained from nearby, adjacent supply wells, test wells or springs.

(7) The study shall include a brief statement of the qualifications of the person(s) preparing the study.

E. Site-Specific Investigations Requirements.

(1) An accurate geologic log should be maintained during the drilling of the pumping test well(s) giving a detailed description of the type and thickness of rocks and overburden encountered. Additionally, the log shall contain information on the depth and thickness of all water bearing zones encountered and the yield from each zone. The total yield from the well shall be measured using a quantitative method. Samples shall be collected every 20 feet during drilling, or at each change in rock type.

(2) A seventy-two-hour pumping test(s) shall be conducted at a rate of not less than 150% of the combined projected water demand for the entire development, and shall include the monitoring of background water levels in all wells for a period not less than two weeks prior to start of pumping. The pumping test shall be conducted during a period when there is no measurable precipitation for at least 48 hours prior to pumping and throughout the test. If precipitation is encountered during this period, the data shall be evaluated using an acceptable method to account for the effects of any recharge upon water levels in the wells, and upon all calculations and assumptions based on the pumping test data. The pumping test shall be conducted at a constant pumping rate that shall not deviate greater than +/- 5% during the test. The pumping test shall be followed by a recovery test, with monitoring conducted until at least 95% recovery of draw down is observed

in the test well, or until 48 hours after termination of pumping, whichever is first.

(3) The monitoring well locations and monitoring program shall be subject to approval by the Township Engineer.

(4) A means of accurately measuring the well discharge shall be provided subject to approval by the Township Engineer.

(5) The pump test discharge shall be directed away from the test well so as not to significantly influence draw down in the test well and monitoring wells. The means of conveyance and point of discharge shall be approved by the Township Engineer, and shall be in accordance with the PADEP Best Management Practices for Water Well Drilling and Aquifer Testing, Publication 3800-FS-DEP2685, as amended.

(6) Records shall be compiled in typewritten form to include the following information:

(a) Name of driller and personnel conducting test.

(b) Description of pumping test well to include horizontal and vertical dimensions, casing installed and grouting details.

(c) List of formation samples.

(d) Static water level immediately prior to yield testing.

(e) Hydrograph of depth to water surface during test pumping and recovery period at the test well showing corresponding pump and discharge rate in gallons per minute and time readings were taken.

(f) Log of depth to water surface at existing and monitoring wells during the test pumping period showing time readings were taken.

(g) Copies of all raw field notes showing original observations, water level and flow readings and the time readings were taken.

(7) A report shall accompany the pump test data that documents interpretation of all data as to the impacts on the groundwater supply and existing wells. The report shall include a graphical extrapolation of long-term drawdown and a contour map of water levels in the test well and monitoring wells after one year of pumping under drought conditions (no recharge), based upon the pump test data. Conclusions regarding the long-term yield of the pumping well and impacts of

long-term pumping to surrounding wells shall be drawn from the analysis.

(8) All well construction information required by the Well Construction Standards shall be included in the Water Resource Impact Study.

9. Well Construction Standards.

A. Any well proposed within the Township is subject to the provisions of this Section.

B. An approved permit from the Township is required for the construction of any well. The required drilling, pump testing and water quality report shall be completed in compliance with the standards herein, prior to the issuance of a building permit.

C. There are two phases of a well construction permit. Phase I consists of the construction permit requirements for drilling the well. Phase II consists of sampling and analysis of the water quality.

(1) Phase I Construction Permit Requirements. The following information shall be submitted with the well construction permit application:

(a) Applicant's name, address and telephone number.

(b) Location map of the proposed development.

(c) A copy of the preliminary plan for subdivision and/or land development for the site pump test and monitoring wells, if applicable.

(d) For any residential well, a copy of the plot plan for building permit application.

(e) Location of all onsite sewage disposal systems.

(f) Show one-hundred-foot isolation distance for each proposed well to verify compliance with the regulations of PA Title 25 Chapter 73 Standards for Sewage Disposal Facilities.

(g) Well driller's name, address and telephone number.

(h) Projected water quantity requirements for the use that the well will serve.

(i) Show the location of and information on all monitoring wells, if applicable.

(2) Phase II Water Quality Analysis Requirements.

(a) Samples shall be obtained from the well at the termination of pump testing to demonstrate drinking water quality conforming to this section. Additional or specialized analysis should be discussed with the Township Engineer prior to sampling for the purposes of streamlining the permitting process; however, said discussion shall not be construed as final approval of the proposed testing.

(b) All samples shall be collected, transported and analyzed in accordance with USEPA and PADEP protocol for drinking water. Sample testing shall be performed by a laboratory certified by the Commonwealth to perform drinking water analysis. Laboratory reports shall contain sufficient quality assurance and quality control data to explain any analysis and reporting conditions or deficiencies.

(c) Water quality must comply with currently published USEPA National Primary and Secondary Drinking Water Standards and Health Advisories.

(d) Water quality testing shall include, at a minimum, the following parameters: Total Coliform, Nitrate/Nitrite, ph, Iron, Manganese, Lead, Chloride, Hardness, Total Dissolved Solids, Surfactants (Detergents), Volatile Organic Compounds – Group 1 (VOC1) + 10 unknowns,* MTBE, Herbicides – Group 1 (H1) and Pesticides – Group 3 (P3). [*NOTE: A Library search for Tentatively Identified Compounds (TICs). Additional analysis will be required if TICs are discovered. Group 1 (VOC1), etc., refers to PADEP categories of contaminants.]

(e) The applicant shall perform a survey to identify and evaluate potential sources of contamination that may impact water quality in the proposed well(s) and shall perform additional sampling and analysis as may be required to assure water quality is satisfactory for the protection of human health and the environment.

(f) Additional sampling and analysis will be required to quantify any observed objectionable effects resulting from the quality of the water, including, but not limited to, odor, color, foaming, staining, scaling and sedimentation.

(g) A well that does not meet the above standards will be required to meet them through adequate treatment facilities. After treatment facilities are installed, the applicant shall have the water supply tested again.

(h) The following information shall be submitted to the Township with the water quality report:

1) A copy of the well record and completion report submitted to the State by the well driller.

2) The report from the laboratory shall contain the name, license number and address of the laboratory.

3) Location of the well or wells.

4) Elevation of the ground at the well head.

5) Depth and diameter of the well.

6) Drilling method.

7) Type of casing and grouting used.

8) The following information shall be shown on the plot plan submitted for a building permit: location and distance from on-lot wastewater disposal systems; septic tanks; sewer mains and laterals.

9) Location and distance to any existing on-lot well(s).

10) Level of treatment provided.

11) Type and quantity of storage provided, if applicable.

D. General Well Construction Requirements. A plan note shall be added to the final record plans referencing the following well construction standards:

(1) All well construction shall be in accordance with the construction requirements set forth by the PADEP Public Water Supply Manual, latest edition, and as contained in this Section. If there is a conflict between the requirements of the PADEP and the requirements of this Section, the more restrictive shall be applicable.

(2) When drilling or increasing the depth of a well, an accurate well drilling log shall be maintained. This log shall contain the following information:

(a) Interval: the depth in feet below a datum level such as ground level or top of casing through which the drill is advancing.

(b) Geologic Description: a description of the rock type penetrated through the particular interval. The description shall include such things as color, texture, rock type and geologic name, if known.

(c) Yield: the total yield of water at the base of the interval last described.

(d) General Comments: include anything that the driller finds noteworthy, i.e., water bearing zones, artesian conditions, change in pressure, loss of fluid, etc.

(3) The pump shall be so located and designed as to make the use of a pump pit unnecessary. Pitless adapters shall conform to the standards set forth by the PADEP.

(4) The space between the pump column and the casing of each well shall be provided with a vent which shall be protected with an elbow facing downward or mushroom type head located at least 18 inches above flood levels. All vents shall be screened to prevent the entry of insects.

(5) The casing shall be temporarily capped and any open space covered until the well has been grouted and the pump installed. The cap should be either threaded onto the casing or be a friction type device which locks onto the outside of the casing.

(6) The well head shall be constructed so as to assure the maximum protection of the well and to exclude entry of any contaminant. All wells shall be cased to protect against contamination. Water bearing formations that are known to be contaminated or identified as being in danger of contamination shall be sealed off with casing and grout. Sealing shall be accomplished by a method approved by the PADEP.

(7) Completed wells shall be properly capped with sanitary seals to prevent the entry of contamination.

(8) All wells shall be provided with a watertight, one-quarter-inch thick welded steel pipe casing. Pipe shall be in accordance with AWWA Standard C200. The minimum length of casing shall be 40 feet or 10 feet into bedrock, whichever is greater. All joints between sections of the casing shall be made by continuous welding in accordance with AWWA Standard C206. All casing shall be extended at least 18 inches above final grade or 12 inches above the basement floor. The space between the earth and outside casing shall be filled with cement grout to a distance of at least six feet below the ground surface.

(9) All monitoring wells, pump test wells or uncompleted wells that are to be abandoned shall be properly sealed. The "Water Well Abandonment

Procedures", as published in Chapter 7 of the PADEP Groundwater Monitoring Guidance Manual, February 1996 edition, as amended, shall be followed for all well abandonment.

E. Single-Family Dwelling Well Requirements. In addition to the pump testing and water quality testing for the total site, the applicant shall address the following for the each proposed well prior to issuance of a building permit for that lot:

(1) The application for a well construction permit shall be made prior to the building permit application. The required drilling, pump testing and water quality analysis shall be completed in compliance with the standards herein, prior to the issuance of a building permit to verify adequate water supply is available for the lot and water is potable.

(2) Each proposed well for a single-family dwelling shall be evaluated through a two-part pump test comprised of a peak demand test and a constant rate pump test. Such pumping tests and any required storage shall be calculated in accordance with the New Jersey Geological Survey Groundwater Report Series No. 1, Two-Part Pump Test for Evaluating the Water Supply Capabilities of Domestic Wells, as prepared by Jeffrey L. Hoffman and Robert Canace for the New Jersey Geological Survey. The Domestic Well Worksheet contained in the above-referenced report shall be submitted to the Township for approval prior to issuance of any building permits.

(3) In order to be certified for use for a single-family dwelling, a well shall have a production of not less than six gallons per minute as certified by a licensed well driller. If less than six gallons per minute yield is established, such a well may still be certified for use if sufficient storage is provided to meet the calculated peak demand. In no case shall a well yielding less than two gallons per minute be certified for use by the Township.

(4) A bacterial test shall be performed on the well after installation of the house plumbing, but within 30 days of requesting issuance of an occupancy permit for the dwelling. The guidelines set forth by the Bucks County Department of Health shall be followed for disinfecting a contaminated well.

10. Monitoring Wells. Monitoring wells shall be constructed in accordance with the general construction standards and the following criteria:

A. The well(s) shall be constructed so as to intercept the aquifer being pumped by the test well, and shall allow for water level measurements or water quality samples to be obtained that are representative of conditions in the aquifer. Well construction shall be approved by the Township prior to any required testing.

B. The applicant shall secure written permission from the property owner for any existing well to be used for monitoring, granting the Township permission for a period not to exceed 18 months after completion of the project, to obtain water level measurements and samples of the water for laboratory analysis as required to verify compliance with this Chapter.

C. The well(s) shall be located close enough to the pumping well(s) so that sufficient drawdown is created in the observation well(s) during the pump test so that aquifer properties and the radius of influence can be calculated. The Township Engineer shall approve the location of the monitoring well(s) and the frequency of monitoring.

D. The monitoring well(s) shall be equipped with a continuous record water level recorder. Hand held electric level tapes or other alternative methods for obtaining water levels will be allowed only upon the written approval of the Township Engineer.

E. The monitoring well(s) shall be completed, including installation of the level recorder prior to any removal of water from the site for domestic use.

F. Pennsylvania State Plane coordinates shall be provided to establish the location of the well(s).

G. The elevation of the ground adjacent to the well(s) in addition to the static water level shall be based on U.S.G.S. vertical datum.

11. Well Depletion Agreement.

A. For subdivisions and/or land developments involving water supply wells, the applicant shall be required to enter into a Well Depletion Agreement with the Township as a condition of final plan approval for all residential subdivisions containing three or more lots/units including the existing lot/unit and all nonresidential subdivisions and all land developments. The Well Depletion Agreement shall establish financial security, in accordance with the approved fee schedule, to provide recourse for the owners of existing wells who have demonstrated adverse impacts upon water quality or quantity in their water supplies, as a direct result of the operation of the applicant's well. The applicant shall be required to maintain the foregoing financial security for a period of 18 months from the date that the Township either accepts dedication of any public improvements or approves completion of improvements not to be publicly dedicated, whichever last occurs.

B. A well monitoring program shall be required for the duration of the Well Depletion Agreement period, to evaluate the actual impact of the development upon adjacent water supply wells and groundwater. The scope of the monitoring program shall be approved by the Township Engineer and made part of the Well Depletion Agreement. At a minimum the program shall in-

clude the monthly monitoring of water levels in all monitoring and pumping wells, and the monitoring of precipitation. If indicated in the Water Resources Impact Study, or in any subsequent groundwater sampling, the program shall include quarterly groundwater sampling to monitor the concentration of any contaminants that exceed, or threaten to exceed, USEPA and PADEP drinking water Maximum Contaminant Levels or Health Advisory Levels. Four copies of the monitoring results shall be submitted to the Township on a quarterly basis in the form of a written monitoring report. Each report shall include a well location map, monthly groundwater contour maps, tabulated data summary, laboratory reports (if required) and analysis of findings and recommendations for program changes and/or mitigation of adverse impacts.

C. The Well Depletion Agreement shall be in a form subject to the approval of the Township, and access agreements shall be secured by the applicant for the benefit of New Britain Township for any existing off-site wells which are being utilized as monitoring wells to provide the Township with access during the eighteen-month maintenance period.

(Ord. 2002-05-02, 5/20/2002, §719)

§22-720. Public Sanitary Sewer System.

1. Purpose. These regulations are to ensure that each residential dwelling unit, commercial, institutional or industrial building constructed in the Township will have an adequate sanitary sewer system.

2. When consistent with the Township's Act 537 Sewage Facilities Plan and Comprehensive Plan, the applicant shall extend existing public sanitary sewer systems to service a proposed subdivision and/or land development, following approval of the plans by the Chalfont-New Britain Township Joint Sewage Authority, PADEP and the township. Any variation from the Township's Act 537 Sewage Facilities Plan and Comprehensive Plan requires approval of the Township, Chalfont-New Britain Township Joint Sewage Authority and PADEP.

3. PADEP Sewage Facilities Planning Module. A completed PADEP Sewage Facilities Planning Module shall accompany all preliminary plan applications submitted for subdivision and/or land development that propose connection to a public sewer system. Prior to submitting the planning module to the Township for approval, the planning module shall have been approved and executed by the applicant, responsible professional engineer, Chalfont-New Britain Township Joint Sewage Authority, Bucks County Department of Health and Bucks County Planning Commission.

4. All public sanitary sewer systems shall be designed and constructed in accordance with standards of the Township and Chalfont-New Britain Township Joint Sewage Authority, as well as in accordance with PADEP Sewerage Manual and Do-

mestic Wastewater Facilities Manual, as amended. All sanitary sewer systems shall also conform to the standards and procedures set forth in Pennsylvania Code, Title 25, Chapter 71, Administration of Sewer Facilities Planning Program.

5. In areas not presently served by public sanitary sewers, appropriate on-site sewage disposal systems shall be provided in accordance with the regulations and procedures of the Township and the PADEP. However, if extension of the existing public sewer system is planned within five years to the service area, the applicant shall install sewer mains and laterals to provide adequate service to each lot when the public sewer extension occurs. The sewer mains shall be suitably capped at the limits of the subdivision, and the laterals shall be capped at the right-of-way line. The sewer main shall be located within rights-of-way or easements, to be owned and maintained by the applicant, Chalfont-New Britain Township Joint Sewage Authority, or private entity approved by the Township.

6. Any public sewage treatment facility or pumping station proposed to service a subdivision shall be dedicated to the Chalfont-New Britain Township Joint Sewage Authority. For any private sewage pumping station proposed to service a land development, the property owner shall execute an operation and maintenance agreement with the Township and post the required financial security. The design plans, and specifications for all facilities shall be approved by the Township and the Chalfont-New Britain Township Joint Sewage Authority prior to final plan approval.

(Ord. 2002-05-02, 5/20/2002, §720)

§22-721. Private On-Lot Sewage Disposal System.

1. Purpose. These regulations are to ensure that each residential dwelling unit, commercial, institutional or industrial building constructed in the Township will have an adequate on-lot sewage disposal system.

2. If connection to the public sewer system is not feasible, or when consistent with the Township's Act 537 Sewage Facilities Plan and Comprehensive Plan, the applicant shall install a sewage disposal system on an individual lot basis in accordance with Township standards and the provisions of Chapters 71 and 73, Administration of Sewage Facilities Program, Pennsylvania Sewage Facilities Act (Act of January 24, 1966), P.L. 1535, No. 537, as amended (35 P.S. §750).

3. PADEP Sewage Facilities Planning Module. A completed PADEP Sewage Facilities Planning Module shall be submitted with all preliminary plan applications submitted for subdivision and/or land development with on-lot sewage disposal systems. Prior to submission of the Planning Module to the Township for approval, the planning module shall be approved/executed by the applicant, responsible professional soil scientist, Bucks County Department of Health and Bucks County Planning Commission.

4. The applicant shall provide the type of sanitary sewer disposal facility consistent with the existing physical, geographical and geological conditions, and the Township's Act 537 Sewage Facilities Plan and Comprehensive Plan. The type, capacity, location and layout of an on-lot sewage disposal system shall comply with all rules, regulations and ordinances of the Township, the Bucks County Department of Health, PADEP and all applicable statutes of the Commonwealth.

5. Final plans shall not be recorded until a permit from the Bucks County Department of Health is issued for each proposed on-lot sewage disposal system, indicating the lot proposed for subdivision and/or land development is suitable for the type of on-lot sewage disposal proposed by the applicant.

6. If the property being subdivided or developed contains an existing onsite sewage disposal system, the applicant shall submit to the Township acknowledgment from the Bucks County Department of Health indicating that the existing system has been inspected and is functioning properly.

7. All lots shall also be tested to identify a suitable replacement area in the event the primary sewage disposal system fails. The on-lot sewage replacement area shall be identified for each lot on the plans and the soil testing shall be approved by the Township and Bucks County Department of Health. An easement deed restricting the sewage replacement area from being built upon shall be provided and shown on the site plan. The sewage replacement area shall be located a minimum of 25 feet from the primary system, and shall not be located directly down slope of the primary system, or within any well isolation area.

8. The applicant shall provide to each lot owner a plan and specifications of the on-lot sewage disposal system and all operational manuals required for the use and proper maintenance of the system.

9. The property owner shall execute an operation and maintenance agreement with the Township and post the required financial security for any non-conventional sewage system, such as an Individual Residential Spray Irrigation System, Small Flow Treatment Facility or Community Sewage System. The design, plans and specifications for the proposed system shall be approved by the Township and Bucks County Health Department prior to final plan approval.

(Ord. 2002-05-02, 5/20/2002, §721)

PART 8

MOBILE HOME REGULATIONS

§22-800. Declaration of Legislative Intent.

In addition to the statement of purposes set forth in Part 1 of this Chapter, it is hereby declared to be the specific intent of this Chapter to establish standards of performance and promote the desirable benefits which planned mobile home parks may have upon the community and the residents within them. It is further the intent of this Chapter to ensure the interdependency and compatibility of proposed mobile home parks with surrounding land uses in the Township and connection to essential utilities.

(Ord. 2002-05-02, 5/20/2002, §800)

§22-801. General Applicability.

1. Individual Mobile Homes. Individual mobile homes may be erected on any lot where the use is permitted by the regulations of the Township Zoning Ordinance [Chapter 27], in compliance with all sections of this Chapter which apply to subdivisions and development of single-family detached dwellings and applicable local or State building codes.

2. Mobile Home Parks or Developments. Any construction or alteration of a mobile home park or development shall comply with the provisions of this Chapter. These provisions are in addition to other applicable regulations of this Chapter and the Township Zoning Ordinance [Chapter 27].

(Ord. 2002-05-02, 5/20/2002, §801)

§22-802. Site Design.

The following regulations shall apply to mobile home parks or developments:

A. Arrangement of Structure and Facilities. The tract, including mobile home stands, patios, other dwellings and structures and all tract improvements, shall be organized in relation to topography, the shape of the plot and common facilities. Special attention shall be given to new mobile home designs and to common appurtenances that are available.

B. Adaptation to Tract Assets. Each mobile home unit or other dwelling or structure shall be fitted to the terrain with a minimum disturbance of the land and a minimum elevation difference between the floor level of the unit and the ground elevation under it. Existing trees and shrubs, rock formations, streams, floodplains, steep slopes, and other natural features of the

tract shall be preserved to the maximum extent practical. Favorable views shall be emphasized by the plan.

C. Courts and Spaces. Groups or clusters of units, so placed as to create interior spaces and courtyards shall be incorporated whenever feasible.

D. Orientation. Applicants are encouraged to arrange mobile homes in a variety of orientations and are also encouraged to have many units with their long sides facing the street rather than their ends, in order to provide variety and interest. Site layout shall be designed to ensure that mobile home units are offset to block long uninterrupted vistas between the units.

E. Streets.

(1) Street patterns shall be related to the topography of the site and designed to minimize site disturbance and preserve natural features on the site.

(2) The internal street system shall be designed as a hierarchy, with feeder or collector streets connecting to exterior roadways and providing external access, and local residential streets (including cul-de-sac streets) providing frontage and access to individual mobile home lots, open space and other common facilities.

(3) Access Limitations. Mobile home lots may have direct access only onto streets internal to the development. Direct access from a mobile home lot shall not be permitted onto the streets from which the mobile home, park or development gains primary access.

(4) Streets shall comply with this Chapter with respect to right-of-way and cartway widths, parking, curbs, intersections, sidewalks, vertical alignments and grades, etc.

F. Pedestrian Circulation. Pedestrian circulation systems shall be provided, including sidewalks along streets, crosswalks, pedestrian walkways through open space and common areas and on-lot walkways connecting mobile home units with streets and sidewalks. All pedestrian facilities shall comply with this Chapter and the Township Zoning Ordinance [Chapter 27].

G. Parking. Off-street parking shall be provided for all uses in compliance with the requirements of the Zoning Ordinance [Chapter 27]. Common parking areas shall comply with this Chapter.

(Ord. 2002-05-02, 5/20/2002, §802)

§22-803. Common Open Space and Facilities.

1. The amount of common open space shall comply with the requirements of the Township Zoning Ordinance [Chapter 27] for the use proposed.

2. In addition to the above requirements of the Township Zoning Ordinance [Chapter 27], all mobile home parks shall comply with the Park and Recreation Land requirements of this Chapter.

3. The design, ownership and maintenance of common open space and other facilities shall comply with the open space requirements of the Township Zoning Ordinance [Chapter 27].

(Ord. 2002-05-02, 5/20/2002, §803)

§22-804. Buffering and Landscaping.

1. All mobile home parks shall comply with the buffer yard requirements of the Township Zoning Ordinance [Chapter 27].

2. All mobile home parks shall comply with the landscape planting requirements of this Chapter, with respect to preservation of existing vegetation, street trees, site element screening, parking area landscaping, etc.

(Ord. 2002-05-02, 5/20/2002, §804)

§22-805. Utilities.

1. All utilities in mobile home parks shall comply with the requirements of this Chapter.

2. Water Supply.

   A. General Requirements. A water supply from a public source, as approved by the Township, for domestic, auxiliary and fire fighting uses shall be provided for all uses included in the mobile home development, including service buildings and accessory facilities, in compliance with the State requirements, Township Zoning Ordinance [Chapter 27], and this Chapter.

   B. Water Distribution System. All water piping, fixtures and other equipment shall be constructed and maintained in accordance with State standards and local regulations as well as those of the servicing utility.

   C. Individual Water-Riser Pipes and Connection.

(1) Individual water riser pipes shall be located within the confined areas of the mobile home stand at a point where the water connection will approximate a vertical position, thereby insuring the shortest water connection possible and decreasing susceptibility to freezing.

(2) The water riser pipe shall terminate at least four inches above the ground surface and shall be provided with a cap when a mobile home does not occupy the lot.

(3) Adequate provisions shall be made to prevent freezing of service lines, valves and riser pipes and to protect risers from heaving and thawing actions of ground during freezing weather. Surface drainage shall be diverted away from the location of the riser pipe.

D. Fire Protection. All mobile home developments shall be provided with fire hydrants, fire lanes, emergency accesses and water supply meeting the fire protection requirements of this Chapter.

3. Sewage Disposal.

A. General Requirements. A public sanitary sewer system shall be provided in all mobile home developments for conveying and disposing of sewage from dwellings, service buildings and accessory facilities in compliance with the requirements of the State, Township Zoning Ordinance [Chapter 27], this Chapter and the servicing utility.

B. Individual Sewer Connections.

(1) Each mobile home pad shall be provided with a sewer riser pipe consistent with the standards of the servicing utility. The sewer riser pipe shall be so located on each pad that the sewer connection to the mobile home drain outlet will approximate a vertical position.

(2) At the time of construction, provision shall be made for the temporary capping of the sewer riser pipe when a mobile home does not occupy the lot. Surface drainage shall be diverted away from the riser. The rim of the riser pipe shall extend at least 1/2 inch above ground elevation.

4. Underground Utilities. Except for electric and natural gas transmission lines, all electric, natural gas, telephone and any other utility lines shall be placed underground in all mobile home developments and each shall have the necessary shutoff valves and other safety requirements normally associated with safe operations. All utility connections shall be appropriately capped for safety purposes whenever a mobile home stand is not occupied.

(Ord. 2002-05-02, 5/20/2002, §805)

§22-806. Permits, Licenses, Fees and Inspections.

1. Permits Required.

   A. Lots for Sale. In those mobile home developments wherein some or all of the mobile home lots will be sold individually (whether completely fee simple, fee simple with a homeowners association, condominium, or cooperative), no lot to be conveyed shall be developed or mobile home or other structure placed or constructed thereon until the subdivision and/or land development plan has properly approved and the proper building and construction permits have been issued to the lot in accordance with standard procedures for any building activity in the Township. No mobile home or other structure shall be occupied until a valid occupancy permit has been issued by the Township.

   B. Lots for Lease. In those mobile home developments wherein some or all of the mobile home lots will be leased, the following regulations shall apply to the entire development exclusive of the lots being sold individually:

      (1) Initial Permits. Prior to constructing, altering, extending, or operating a mobile home development, the applicant shall comply with the following requirements:

         (a) The applicant shall obtain a building permit authorizing foundation and site construction. The applicant shall also obtain all permits for water supply and sewage systems prior to the issuance of building permits.

         (b) The applicant shall comply with all other requirements contained in this Chapter and in the Township Zoning Ordinance [Chapter 27].

2. Fees. All fees for mobile homes are found in the current fee schedule under the appropriate zoning, building or mechanical schedule.

3. Inspection.

   A. Upon notification to the licensee, manager or person in charge of a mobile home park or development with lots for lease, the Building Inspector or Zoning Officer may inspect a mobile home development after due notice to determine compliance with this Chapter.

   B. Upon receipt of the application for annual license and before issuing such annual license, the Zoning Officer or other designated representative of the Township may make an inspection of the mobile home park or development to determine compliance with this Chapter and other applicable ordinances. The Zoning Officer or other Township representative shall thereafter notify

the licensee of any instances of noncompliance and shall not issue the annual license until the licensee has corrected all such violations.

4. Mobile Home Inspections. The applicant shall inform the Township of the delivery date of a mobile home. The Township Code Enforcement Officer or Building Inspector shall inspect the mobile home upon its arrival at the site prior to installation, to determine if it meets the standards of Part 5, Standards for the Installation of Mobile Homes (ANSI/NFPA) publication #501A 1977. The Township Code Enforcement Officer or Building Inspector shall also inspect the mobile home after its installation and prior to occupancy by residents, in order to determine its compliance with installation instruction outlined in the Building System Approval Report, which shall be provided by the applicant.

(Ord. 2002-05-02, 5/20/2002, §806)

§22-807. Additional Requirements.

1. Mobile Home Stands. All mobile home stands shall comply with the requirements of the Township Zoning Ordinance [Chapter 27].

2. Anchoring and Stability. Each mobile home shall be affixed and anchored to its mobile home stand in such a way so as to prevent tilting of the unit. This anchoring shall occur prior to the unit being occupied or used in any other way, or the expiration of seven days, whichever occurs first. No mobile home shall permanently rest on the wheels used to transport the unit. The anchoring system shall be designed to comply with the most stringent standards of the following: the Township Building Code, the manufacturer's standards, or the Township Zoning Ordinance [Chapter 27].

3. Skirts. All mobile homes placed within a mobile home development shall, prior to occupancy or other use, have skirts installed for protection of the utility connections. Skirts shall be made of brick, block, stone, wood or some other permanent material as approved by the Township.

4. Hitch. The hitch or tow bar attached to a mobile home for transport purposes shall be removed and remain removed from the mobile home when it is placed on its mobile home stand.

(Ord. 2002-05-02, 5/20/2002, §807)

PART 9

ADMINISTRATION, FEES AND ENFORCEMENT

§22-900. General Administration.

All provisions of this Chapter shall be administered by the Board or its officially designated representatives. All matters relating to this Chapter shall be submitted to the Township, which will handle the matter in accordance with current policies, procedures, and guidelines.

(Ord. 2002-05-02, 5/20/2002, §900)

§22-901. Records.

The Township shall keep a public record of its correspondence, findings, recommendations, and actions relating to plans filed for review, in accordance with applicable laws and ordinances.

(Ord. 2002-05-02, 5/20/2002, §901)

§22-902. Fees and Costs.

1. No application for preliminary or final plan approval shall be accepted and processed until the fees and/or escrow deposit have been paid pursuant to the Township's current Fee Schedule and Professional Services Agreement.

2. The Board shall adopt and amend by resolution a schedule of fees and expenses, payable by the applicant to the Township and for the administrative costs associated with the Township's consultants' fees.

3. The Board shall adopt and amend by resolution a schedule of escrow deposits to be paid by the applicant to the Township at the time of filing of an application, sufficient to pay all Township expenditures anticipated in the course of its review and disposition of plans.

    A. Costs incurred by the Township in excess of the escrowed amount shall be paid by the applicant prior to the granting of approvals or permits.

    B. If costs incurred by the Township are less than the escrowed amount, the difference shall be refunded to the applicant following disposition of the plans.

C. If the escrow deposit falls below a minimum amount determined by resolution of the Board, the applicant shall replenish the escrow deposit up to the required minimum.

4. Township expenditures subject to escrow include, but are not limited, to the following:

A. Engineering and other technical services such as plan review, construction inspections, and attendance at meetings related to the plan.

B. Materials and facilities tests.

C. Services of the Township Solicitor in reviewing and/or preparing documents related to the plan and attendance at any meetings relating to the plan.

D. Planning consultant reviews and attendance at any meetings related to the plan.

5. Disputes. The procedures for fee/escrow disputes shall comply with §§503 and 510 of the MPC, as amended.

(Ord. 2002-05-02, 5/20/2002, §902)

§22-903. Required Improvements.

1. All improvements shall be constructed and/or dedicated without cost to the Township as required by this Chapter and/or as stipulated in the Development Agreement in a manner approved by the Township consistent with sound construction methods. These improvements include but are not limited to:

A. Grading.

(1) Grading of roadways and street rights-of-way and grading of slopes adjacent to roadways and street rights-of-way.

(2) Grading of all draining swales on public or private property and grading of individual lots, to establish positive drainage away from buildings to eliminate low spots.

(3) Implementation and maintenance of soil erosion control and sedimentation control facilities.

(4) Replacement of topsoil and vegetative restoration in disturbed areas not stabilized with building, paving or other non-vegetative ground cover.

(5) Removal of temporary soil erosion and sedimentation control facilities when they are no longer required.

B. Street or road sub-base, base and paving.

C. Curbs, gutters, driveway aprons and parking facilities.

D. Sidewalks, crosswalks, pathways and bike paths.

E. Underground facilities for electric, telephone and television cable lines.

F. Storm sewer, drainage facilities and easements.

G. Public sanitary sewer system.

H. Public or centralized water supply and distribution systems, including but not limited to wells, pumping equipment, water laterals, sub-mains, storage tanks and equipment systems.

I. Street name signs at all street intersections and official traffic control signs and markings.

J. Permanent monuments and lot pins.

K. Fire hydrants.

L. Street trees, landscaping.

M. Open space improvements and/or recreational facilities, buffer or screen plantings.

N. Street lights.

2. Upon final plan approval, and in-lieu-of the completion of the improvements required as a condition for the final approval of a plat, the developer shall provide for deposit with the Township financial security in an amount sufficient to cover the costs of all such improvements or common amenities as shown on the approved plans. The form of financial security shall be either by letter of credit, cash deposit or tri-party agreement with a Federal or Commonwealth chartered lending institution, unless some other form is approved by the Board.

(Ord. 2002-05-02, 5/20/2002, §903)

§22-904. Construction of Facilities.

1. The developer shall construct and install, at no expense to the Township, the improvements specified in this Chapter and as shown on the final plan approval.

Construction and installation of such facilities and utilities shall be subject to inspection by the Township Engineer and other public or utility officials during the progress of the work.

2. During the construction and installation of all facilities and utilities required by this Chapter, the developer shall ensure that access to the job site from a public road shall be kept clear and free of all obstructions and otherwise in a passable condition to all areas of the job site for emergency, fire and police vehicles. In the event of a dispute, passable access for the foregoing purposes shall be determined by the Township Engineer and Township Fire Marshal.

(Ord. 2002-05-02, 5/20/2002, §904)

§22-905. General Standards.

1. The following principles of subdivision and land development, general requirements and the minimum standards of design, shall be observed by the developer in all instances:

   A. It is the developer's responsibility to comply with all applicable plan requirements, ordinances, statutes and regulations of New Britain Township, Bucks County, the Commonwealth of Pennsylvania, and the United States of America.

   B. The proposed subdivisions and/or land developments shall be coordinated with existing nearby development so that the area as a whole may develop harmoniously. Provisions shall be made to ensure that the street patterns included in a proposed subdivision shall compliment existing or proposed streets shown on the current official Township street and road map and/or nearby approved developments.

2. In most cases where precise design standards are not specified in this Chapter, the design standards of the following organizations shall govern where applicable:

   A. Roads and Streets: The Pennsylvania Department of Transportation.

   B. Sanitary Sewer: The Pennsylvania Department of Environmental Protection, Bucks county Department of Health, and servicing municipal authority.

   C. Water: The Pennsylvania Department of Environmental Protection, Bucks County Department of Health, Delaware River Basin Commission, and servicing municipal authority.

   D. Soil and Erosion Control: The Bucks County Soil Conservation District, Department of Environmental Protection, U.S. Department of Agriculture, Soil Conservation Service, New Britain Township.

E. General Engineering: American Society of Civil Engineers, Army Corps of Engineers, Federal Emergency Management Association, New Britain Township Engineer.

(Ord. 2002-05-02, 5/20/2002, §905)

§22-906. Enforcement.

1. Preventive Remedies.

   A. In addition to other remedies, the Township may institute and maintain appropriate actions by law or in equity to restrain, correct or abate violations, to prevent unlawful construction, to prevent unlawful subdivision and/or land development, to recover damages and to prevent illegal occupancy of a building, structure or lot.

   B. The Township may refuse to issue any permit or grant any approval necessary to further improve any real property that has been developed or has resulted from a subdivision and/or land development in violation of this Chapter. As an additional condition for the issuance of any permit or approval, the Township may require compliance with the conditions that would have been applicable to the property at which time the applicant acquired it.

   C. Violations of any terms/conditions of an approved final plan or any terms/conditions of the Development/Financial Security Agreements authorized by this Chapter shall be deemed violations of this Chapter.

2. The procedure for enforcement remedies shall comply with §§515.1 and 515.3 of the MPC, as amended.

(Ord. 2002-05-02, 5/20/2002, §906)

PART 10

AMENDMENTS AND VALIDITY

§22-1000. Amendment Procedures.

1. The Board may, from time to time, amend, supplement, change, modify, or repeal this Chapter by proceeding in accordance with the provisions of the MPC.

2. Whenever a proposed amendment affects a particular property, there shall be posted upon said property or premises at such place or places as the Board may direct, notice of said proposed amendment.

(Ord. 2002-05-02, 5/20/2002, §1000)

§22-1001. Referral to Planning Commission.

At least 30 days prior to the public hearing on the proposed ordinance all proposed amendments shall be referred to the Township and Bucks County Planning Commissions for recommendation and report, which shall be advisory.

(Ord. 2002-05-02, 5/20/2002, §1001)

§22-1002. Forwarding Amendments to County Planning Commission.

Within 30 days after adoption of an amendment, the Board shall forward a certified copy of the amendment to the Bucks County Planning Commission.

(Ord. 2002-05-02, 5/20/2002, §1002)

§22-1003. Validity and Severability.

The following is hereby declared to be the legislative intent of this Chapter:

A. If a court of competent jurisdiction declares any provision of this Chapter to be invalid or ineffective in whole or in part, the effect of such decision shall be limited to those provisions which are expressly stated in the decision to be invalid or ineffective, and all other provisions of this Chapter shall continue to be separately and fully effective.

B. If a court of competent jurisdiction finds the application of any provision or provisions of this Chapter to a property, building, or other structure, to be invalid or ineffective, in whole or in part, the effect of such decision shall be limited to the person, property or situation immediately involved in the con-

troversy and the application of any such provision to other persons, property or situations shall not be affected.

C. This Chapter would have been adopted if any such illegal, invalid or unconstitutional section, clause, sentence, part or provision had not been included.

(Ord. 2002-05-02, 5/20/2002, §1003)

22 Attachment 1

Township of New Britain

TOWNSHIP OF NEW BRITAIN

Bucks County, Pennsylvania
Founded: 1723

NEW BRITAIN TOWNSHIP
SUBDIVISION & LAND DEVELOPMENT APPLICATION

New Britain Township

File No. _____

1. Date of Application:_____ 2. Date of Plan or Revision: _____

3. Application for: Fee Paid Fee Paid

☐ Subdivision ☐ Sketch Plan Review_____ ☐ Preliminary Approval_____

☐ Land Development ☐ Feasibility Review _____ ☐ Final Approval_____

☐ Preliminary Approval_____ ☐ Minor Subdivision_____

4. Name of Subdivision or Land Development_____

5. Location _____

Tax Parcel No.:_____ Total Acreage: Gross_____ Net_____

7. Net Buildable Site Area (from Section 603): _____

8. Zoning Requirements: District_____ Minimum Lot Size_____

Maximum Density_____

Yards: Front_____ Side_____ Rear_____

9. Number of Lots or Dwelling Units _____

10. Equitable Owner of Record of Land _____

Address _____ Phone_____

11. Applicant_____

Address _____ Phone_____

_____
Signature of Applicant

12. Registered Engineer or Surveyor _____

Address _____ Phone_____

This is to certify that I have read Article V of the New Britain Township Subdivision and Land Development Ordinance, and that the accompanying plan meets the requirements of that Article to the best of my knowledge.

_____
Seal Signature of Registered Engineer or Surveyor

TOWNSHIP OF NEW BRITAIN

Bucks County, Pennsylvania
Founded: 1723

NEW BRITAIN TOWNSHIP
SUBDIVISION & LAND DEVELOPMENT
PLAN SUBMISSION CHECKLIST

DATE OF APPLICATION __/__/____

SUBDIVISION/LAND DEVELOPMENT
NAME: _____

ADDRESS OF PROPERTY: _____

OWNER(S) NAME: _____

APPLICANT'S NAME: _____

TAX MAP PARCEL NUMBER: #26-_____

PLAN SETS – FOLDED to 8 1/2 by 11: (18 total)

_____ NBT Planning Commission – 7 copies

_____ NBT File – 3 copies

_____ NBT Board of Supervisors – 5 copies

_____ Township Engineer – 2 copies

_____ Fire Marshal – 1 copy

PLAN SETS FOR OUTSIDE AGENCIES – FOLDED to 8 1/2 by 11: The applicant must show proof of submission to the outside agencies listed below (stamped copy or cover letter and copy of application form). The following plan sets are subject to the requirements of the outside agency and must be submitted to the outside agency by the applicant.

_____ Bucks County Planning Commission (1 copy)

_____ Bucks Conservation District (1 copy)

_____ Township Approved Water Supplier (1 copy)

_____ Chalfont New Britain Township Joint Sewer Authority (3 copies)

OR

_____ Bucks County Department of Health (1 copy)

APPLICATION FORMS & FEES TO BE SUBMITTED TO THE TOWNSHIP. All applications must include these items or the application will be considered administratively incomplete and returned to the applicant.

_____ New Britain Township Subdivision and Land Development Application (1 signed original)

_____ Filing Fee according to the most current Fee Schedule adopted by Resolution.

_____ Escrow Fee according to most current Fee Schedule adopted by Resolution.

_____ Contract for Professional Services Agreement (3 signed originals)

_____ Application to B.C. Planning Commission – Applicant must provide proof of submission

_____ Application to Bucks Conservation District – Applicant must provide proof of submission

_____ Applicant Plan Submission Checklist (It is recommended that this item be completed by the applicant's professional engineer or land surveyor)

_____ Stormwater Management Report (2 copies)

_____ PADEP Sewage Facilities Planning Module Application/Mailer (Original and two copies)

_____ If applicable – Traffic Impact Study (2 copies)

_____ If applicable – PA DOT Highway Occupancy Permit Plan/Application (2 copies)

If applicable – Community Impact Assessment Report (4 copies)

REVIEWED BY:_____ DATE: _____
New Britain Township Zoning Officer

All fees, or contributions in lieu of, shall be payable to New Britain Township. All plan sets, applications and forms shall be submitted directly to New Britain Township.

The attached checklist is provided for the applicant as a guideline to assist in the submission process. All applications must include these items or the application will be considered administratively incomplete and returned to the applicant.

APPLICANT'S CHECKLIST AND SUBMISSION PROCEDURES

IMPORTANT: *It is recommended that this item be completed by the applicant's professional engineer or land surveyor.*

Please use the following checklist as a guideline for application submission. If applicable, the township and township engineer will look for these items in your application. Failure to provide an applicable item may delay acceptance of application and/plan approval. Please be advised that final approval will not be granted by the township unless final approvals are approved by the appropriate water and sewer authorities.

Note: Maximum Record Plan Sheet Size 24 inches by 36 inches

	Item	Code*	Applicant Comments
	Type of Water Supply (Public or Private)		
	Type of Sewage Disposal Facilities (Public or Private)		
	PADEP Sewage Facilities Planning Module Application/Mailer		
	List of Waivers/Variances/Special Exceptions on Record Plan		
	Letter of Requested Waivers with Justification		
	Provide 5 Signature Lines on Record Plan for Board of Supervisors		
	Indicate Zoning Data Chart on Record Plan (required and proposed dimensions)		
	Indicate Parking Requirements on Record Plan (required and proposed spaces)		
	Indicate proposed Use Designation on Record Plan		
	Indicate Site Capacity Calculations on Record Plan		
	Adjoining Property Owner names & Tax Map Parcel Numbers		
	Soil Erosion and Sediment Control Plan		
	Utility Plan		
	Landscape & Lighting Plan (show street trees, buffer plantings, lighting locations, isolux lines)		
	Stormwater Management Plan		
	Wetlands Certification on Record Plan		
	PaDot Permit Application/Plan		
	Existing and Proposed Easements, Rights-of-Way or Other Restrictions on the Property		

* A – Noted on Application P – Noted on Plan Sheet N/A – Not Applicable W – Noted on List of Waivers

TOWNSHIP OF NEW BRITAIN

Bucks County, Pennsylvania
Founded: 1723

New Britain Township
Subdivision and Land Development Procedures
Information for Applicants

Applications:

All formal applications must be submitted to the Township Zoning Office during regular office hours at least 10 days prior to the next scheduled NBT Planning Commission meeting.

All required plans, fees and accompanying documentation must be submitted to the Township in accordance with the New Britain Township Plan Submission Checklist. No application shall be considered complete without this information.

If the application is found to be incomplete, the Zoning Officer will advise the applicant, in writing, of the deficiencies within five business days.

If the application is found to be complete, the application will be date-stamped, and a letter will be forwarded to the applicant with the anticipated application processing dates and scheduled Planning Commission and Board of Supervisors' meeting dates. The application will then be distributed for review to the Township professional staff, boards and commissions, and professional consultants.

If for any reason the Planning Commission does not meet within 30 days of the initial application filing approval date of the Township Zoning Officer, the Municipalities Planning Code (MPC) timetable for plan review processing will then automatically begin, unless waived by the applicant.

Review Process:

Upon receipt of the Township Engineer's review letter, it is recommended that the applicant conference with Township staff and/or the Township Engineer prior to the scheduled Planning Commission meeting when the Planning Commission would consider the application for a recommendation. During the conference, if it is determined

that the application will require substantial revisions for compliance with Township ordinances, the Township staff and/or engineer will advise the applicant of an appropriate course of action for revising the application. An extension to the ninety-day time limit, as setforth by the MPC, may be necessary to allow sufficient time for the applicant to make necessary plan revisions and for Township staff and its engineer to review the revised application.

All revised applications must be resubmitted directly to the Township Zoning Office. It shall be the responsibility of the applicant to submit the same number of revised plans to the Township as with the original application.

Recommendations and Plan Decisions:

The Planning Commission in its review shall consider the comments, if submitted, of the Bucks County Planning Commission, Bucks Conservation District, and Township professional staff and consultants. At their anticipated monthly meeting, the Planning Commission may do any of the following:

- Recommend that the applicant address plan deficiencies or unresolved planning issues with Township staff.
- Recommend to the Board of Supervisors that the plan be approved with conditions and specifically list such conditions.
- Recommend to the Board of Supervisors that the plan be denied and specifically list the reasons for such a recommendation.

The Board of Supervisors shall take official action on all applications, after receiving the Township engineer's report and the recommendation by the Planning Commission, and within the ninety-day time limit, unless the applicant grants a time extension. The action of the Board of Supervisors shall be in writing, and communicated to the applicant in accordance with the MPC.

Record Plans:

Final plans to be recorded must be submitted directly to the Township Engineer for review and execution prior to approval by the Board of Supervisors. The plans must include three mylars and six paper copies of the record plan(s). All record plans must bear the original seal and signature and title of the professional engineer or surveyor responsible for preparation of the plans, and bear the notarized signature of the land owner(s). At the time of record plan submission, five complete paper sets of the construction drawings and one electronic copy in accordance with the SLDO must be submitted to the Township Engineer to be stamped approved for construction.

No final record plans shall be recorded for any project unless all of the following have been satisfied:

- All conditions of final approval have been met (including water and sewer approvals/agreements) and approved by Township Solicitor and Engineer
- All required outside agency approvals/permits have been obtained
- All Township legal, engineering, planning and administrative costs relative to the plan submission have been paid in full
- The required development agreements have been executed and the financial security has been posted with the Township

The Township Zoning Officer will record all final record plans at the Bucks County Courthouse. The Township will notify the applicant when copies of the recorded plans are available to be picked up at the Township Zoning Office.

Contract for Professional Services Agreement and Professional Escrows:

The applicant shall be responsible for maintaining the original escrow balance relative to the escrow account established with the Township for the payment of Township incurred costs and fees on behalf of the applicant per the Contract for Professional Services Agreement. The Township shall forward an invoice to the applicant setting forth the amount deducted from the said escrow account for payment of costs and fees. Within 14 days of the date of the invoice, the applicant shall remit the amount of the invoice to the Township, thereby bringing the balance of the escrow back to the original amount. In the event the applicant's escrow account balance falls below the original amount, the Township may direct its professionals and consultants to cease work on the applicant's submission until such time as the escrow account balance is restored to its original amount.

Any applicant who desires to meet with the Township's professionals or consultants prior to submitting a plan application shall execute a Contract for Professional Services Agreement with the Township and post an escrow amount to be determined therein to cover any costs incurred by the Township associated with the aforementioned consultations.

The applicant should also be advised that the Township has enacted a Full Disclosure Ordinance that mandates the seller of any lot divulge certain information to the purchaser of the lot prior to settlement.

**These guidelines may be amended from time to time, as needed.*

22 Attachment 2

Township of New Britain

APPENDIX B

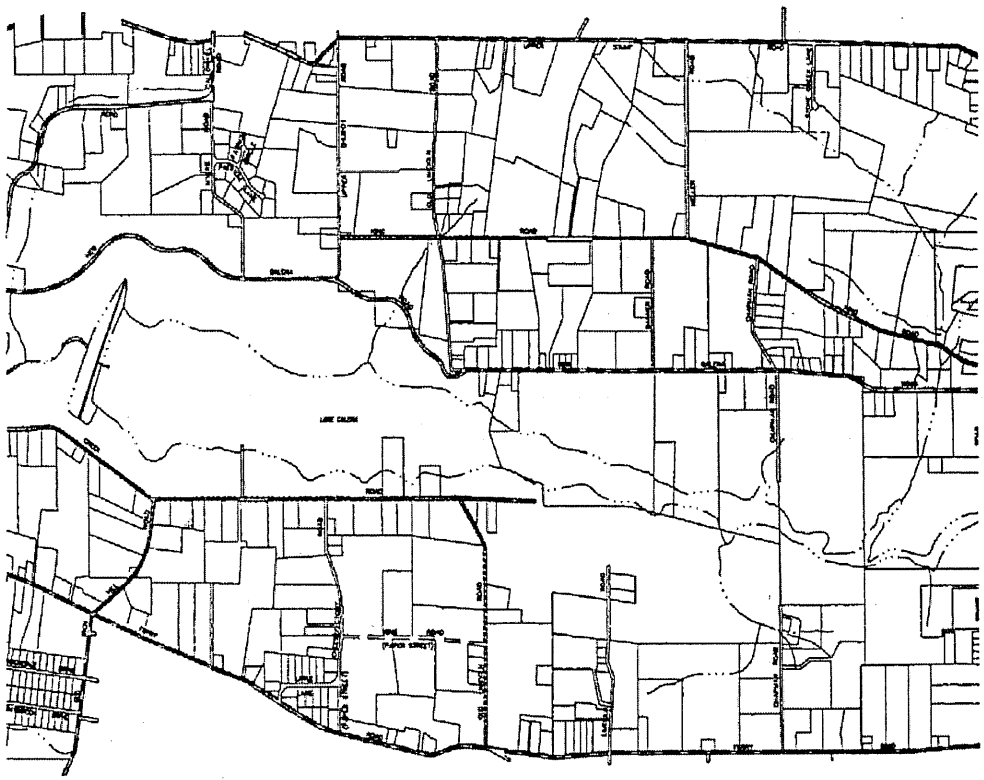

STREET CLASSIFICATION LEGEND

═══	-	ARTERIAL STREFT
═ ═ ═ ═	-	MAJOR COLLECTOR STREET
═══	-	MINOR COLLECTOR STREET
(ALL OTHER)	-	LOCAL ROADS

STREET CLASSIFICATION MAP
NEW BRITAIN TOWNSHIP
BUCKS COUNTY, PENNSYLVANIA

SCALE IN FEET

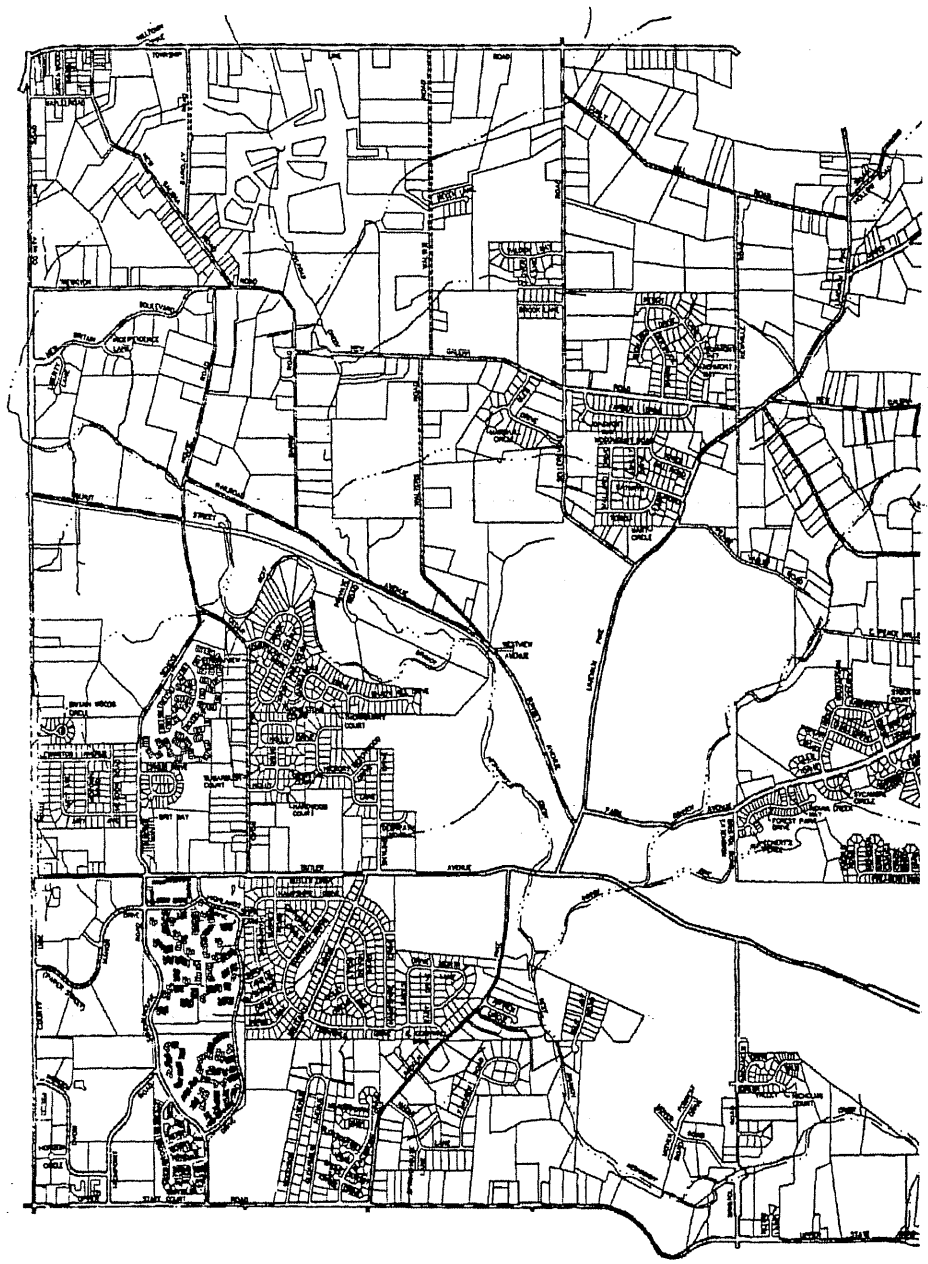

Carroll Engineering Corporation

949 Easton Road
Warrington, PA 18976
Phone 215-343-5700
Fax 215-343-0875

333 Second Avenue, Suite G-101
Collegeville, PA 19426
Phone 610-489-5100
Fax 610-489-2674

www.carrollengineering.com

22 Attachment 3

Township of New Britain

APPENDIX C

New Britain Township Planning Areas

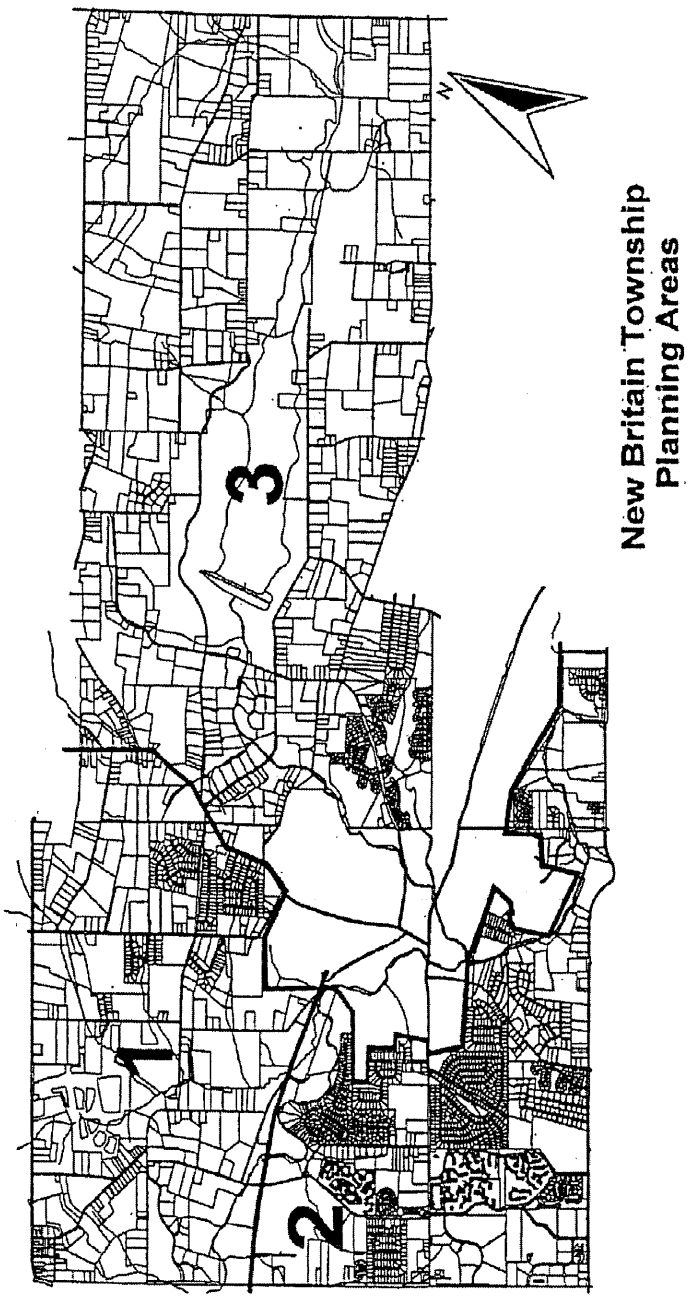

22 Attachment 4

Township of New Britain

APPENDIX D

REQUIRED PLANT MATERIAL LIST

All required landscape plantings shall be in accordance with the following lists, unless otherwise approved by the Board:

A. STREET TREES—Suitable for street trees, parking areas and site element buffers and screens. Minimum caliper size shall be three–3½ inches.

Scientific Name	Common Name
Acer rubrum	Red Maple
Celtis sp.	Hackberry
Corylus colurna	Turkish Filbert
Ginkgo biloba	Ginkgo (male only)
Koelreuteria paniculata	Golden Rain Tree
Quercus bicolor	Swamp White Oak
Quercus imbricaria	Shingle Oak
Quercus phellos	Willow Oak
Quercus prinus	Chestnut Oak
Quercus rubra (borealis)[1]	Red Oak
Sophora japonica	Japanese Pagodatree
Tilia americana	American Linden
Tilia cordata	Little Leaf Linden
Tilia tomentosa	Silver Linden
Zelkova serrata	Japanese Zelkova

[Ord. 2010-03-01]

B. SHADE TREES—Suitable for site element buffers and screens, and for non-vehicular use areas only. Minimum caliper size shall be three–3½ inches.

Scientific Name	Common Name
Acer saccharum	Sugar Maple

[1] **Quercus rubra is limited 10% of the total street tree and/or shade tree requirements. [Ord. 2010-03-01]**

Scientific Name	Common Name
Betula lenta	Sweet Birch
Betula nigra	River Birch
Carya ovata	Shagbark Hickory
Fagus grandifolia	American Beech
Fagus sylvatica	European Beech
Fraxinus americana	White Ash
Liriodendron tulipifera	Tuliptree
Ostrya virginiana	Hop Hornbeam
Phellodendron amurense	Amur Cork Tree
Quercus alba	White Oak
Quercus coccinea	Scarlet Oak
Quercus palustris[2]	Pin Oak
Quercus vellutina	Black Oak

[Ord. 2010-03-01]

C. ORNAMENTAL TREES—Suitable for site element buffers and screens. Trees shall have minimum height of eight feet and minimum caliper size of 1½ to two inches.

Scientific Name	Common Name
Aesculus octandra	Yellow (Sweet) Buckeye
Amelanchier canadensis	Serviceberry
Cercis candensis	Redbud
Chionanthus virginicus	Fringetree
Cornus kousa	Japanese Dogwood
Cornus mas	Cornelian Cherry
Crataegus cv. Toba	Toba Hawthorn
Crataegus mollis	Downy Hawthorn
Crataegus oxycantha	English Hawthorn
Crataegus phaenopyrum	Washington Hawthorn
Halesia carolinia	Silverbells
Koelreuteria paniculata	Golden Raintree
Magnolia virginiana	Sweetbay Magnolia

[2] Quercus palustris is limited 10% of the total street tree and/or shade tree requirements. [Ord. 2010-03-01]

Scientific Name	Common Name
Malus sp.	Crab Apple Species
Oxydendrum arboreum	Sourwood
Prunus sargentii	Sargent Cherry
Prunus serrulata cv. Kwanzan	Kwanzan Cherry
Pyrus calleryana cv. Bradford	Callery Pear
Sassafras albidum [Ord. 2010-03-01]	
Sorbus aucuparia	European Mountain Ash
Styrax japonica	Japanese Snowbell
Syringa amurensis japonica	Japanese Tree Lila

[Ord. 2010-03-01]

D. EVERGREEN TREES—Suitable for site element buffers and screens. Minimum planting height shall be six feet.

Scientific Name	Common Name
Abies concolor	White Fir
Ilex opaca	American Holly
Picea abies	Norway Spruce
Picea omorika	Siberian Spruce
Picea pungens	Colorado Spruce
Pinus strobus	White Pine
Pinus thunbergii	Japanese Black Pine
Pseudotsuga menziesii	Douglas Fir
Tsuga canadensis	Canadian Hemlock
Tsuga caroliniana	Carolina Hemlock

E. DECIDUOUS OR EVERGREEN SHRUBS—Suitable for site element buffers and screens. Minimum planting height or spread shall be 30 inches.

Scientific Name	Common Name
Azalea evergreen species	Azalea
Chamaecyparis obtusa	Chamaecyparis
Chamaecyparis pisifera	Chamaecyparis
Ilex crenata	Japanese Holly
Ilex glabra cornpasta	Inkberry

Scientific Name	Common Name
Ilex meserveae	Blue Holly Series
Upright Juniper sp.	Various Junipers
Kalmia latifolia and cvs	Mountain Laurel
Leucothoe fontanes	Leucothoe
Pieris floribunda	Mountain Andromeda
Pieris japonica	Japanese Andromeda
Rhododendron sp.	Various Rhododendrons
Taxus sp.	Various Yew
Thuja sp.	Arborvitae
Viburnum rhytidophyllum	Leatherleaf Viburum
Aronia arbutifolia	Black Chokeberry
Cornus mas	Cornelian Cherry
Cotoneaster salicifolia	Willowleaf Cotoneaster
Euonymous alatus	Winged Euonymous
Euonymous alatus compactus	Dwarf Winged Euonymous
Lonicera fragrantissima	Winter Honeysuckle
Ribes alpinurn	Currant
Viburnum sp.	Various Viburnum

[Ord. 2010-03-01]

F. LARGE DECIDUOUS SHRUBS—Suitable for site element buffers and screens. Minimum planting height shall be 42 inches.

Scientific Name	Common Name
Aronia arbutifolia	Black Chokeberry
Calycanthus floridus	Sweet Shrub
Clethra acuminata	Summersweet
Cornus serica	Red Osier Dogwood
Enkianthus campanulatus	Redvien Enkianthus
Euonymous alatus	Burning Bush
Forsythia sp.	Forsythia
Fothergilla major	Large Fothergilla
Ilex verticilata	Winterberry
Lindera benzoin	Spicebush

Scientific Name	Common Name
Myrica pennsylvanica	Bayberry
Philadelphus spp.	Mock Orange
Physocarpus opulifolius	Common Ninebark
Sambucus canadensis	Elderberry
Spirea nipponica	Snow Mound Spirea
Viburnum sp.	Large Viburnums

[Ord. 2010-03-01]

APPENDIX E:

CONSTRUCTION DETAILS AND SPECIFICATIONS

TABLE OF CONTENTS

SHEET NO.	TITLE
1	GENERAL CONSTRUCTION NOTES
2	TYPICAL ROADWAY WIDENING SECTION DETAIL FOR ARTERIAL, COLLECTOR, AND NON-RESIDENTIAL ROADS
3	TYPICAL ROADWAY WIDENING SECTION DETAIL FOR RESIDENTIAL AND LOCAL ROADS
4	PIPE BEDDING DETAIL
5	STORM SEWER & UTILITY TRENCH RESTORATION WITHIN PAVED AREAS DETAIL
6	STORM SEWER & UTILITY TRENCH RESTORATION WITHIN PERVIOUS AREAS DETAIL
7	RESIDENTIAL DRIVEWAY PAVING SECTION DETAIL
8	NON-RESIDENTIAL AND MULTI-RESIDENTIAL DRIVEWAYS, PARKING AREAS AND LOADING AREAS PAVING SECTION DETAIL
9	PLAIN CEMENT CONCRETE CURB DETAIL
10	BELGIAN BLOCK CURB DETAIL
11	CONCRETE SIDEWALK DETAIL
12	DEPRESSED CURB DETAIL
13	DRIVEWAY AND APRON DETAIL
14	ROAD UNDERDRAIN DETAIL
15	STREET LIGHT DETAIL
16	PARKING SPACE STRIPING DETAIL
17	STREET SIGN DETAIL

THE FOLLOWING NOTES PERTAIN TO ALL PROPOSED CONSTRUCTION METHODS, MATERIALS, STRUCTURES AND FACILITIES WITHIN NEW BRITAIN TOWNSHIP. THESE CONSTRUCTION NOTES, IN A SIMILAR FORMAT, MUST BE PROVIDED ON THE RECORD PLAN. THE APPLICANT SHOULD MODIFY THE CONSTRUCTION NOTES OR PROVIDE ADDITIONAL NOTES, AS NECESSARY, WHEN THE DESIGN METHODS AND STANDARDS ARE NOT SPECIFICALLY STATED. UNLESS A MORE RESTRICTIVE DESIGN METHOD OR STANDARD IS SPECIFIED IN NEW BRITAIN TOWNSHIP'S ZONING OR SUBDIVISION AND LAND DEVELOPMENT ORDINANCES, THE FOLLOWING SHALL APPLY TO ALL CONSTRUCTION ACTIVITIES:

1. ALL CONSTRUCTION METHODS AND MATERIALS MUST COMPLY WITH THE PENNSYLVANIA DEPARTMENT OF TRANSPORTATION PUBLICATION 408, LATEST REVISION.
2. ALL PROPOSED STRUCTURES AND FACILITIES MUST BE CONSTRUCTED IN ACCORDANCE WITH THE PENNSYLVANIA DEPARTMENT OF TRANSPORTATION PUBLICATION 72, "ROAD CONSTRUCTION STANDARDS", LATEST REVISION.
3. ALL PROPOSED STREETS, ACCESS DRIVES, DRIVEWAYS AND UTILITIES SHALL COMPLY WITH THE PENNSYLVANIA CODE, TITLE 67, CHAPTER 441, "ACCESS TO AND OCCUPANCY OF HIGHWAYS BY DRIVEWAYS AND LOCAL ROADS", AND CHAPTER 459, "OCCUPANCY OF HIGHWAYS BY UTILITIES", LATEST REVISION.
4. ALL PROPOSED STRUCTURES AND FACILITIES MUST COMPLY WITH THE AMERICANS WITH DISABILITY ACT, "ACCESSIBILITY GUIDELINES FOR BUILDINGS AND FACILITIES", LATEST REVISION.
5. ALL PROPOSED WATER AND SEWER FACILITIES MUST COMPLY WITH THE STANDARDS AND POLICIES OF THE APPLICABLE WATER AUTHORITY, SEWER AUTHORITY, BUCKS COUNTY HEALTH DEPARTMENT, PENNSYLVANIA DEPARTMENT OF ENVIRONMENTAL PROTECTION AND NEW BRITAIN TOWNSHIP.
6. ALL CONTRACTORS SHALL BE RESPONSIBLE FOR ENSURING ALL CONSTRUCTION ACTIVITIES ARE PERFORMED IN ACCORDANCE WITH THE STANDARDS AND POLICIES OF THE BUCKS COUNTY CONSERVATION DISTRICT.
7. ALL CONTRACTORS SHALL BE RESPONSIBLE FOR ENSURING ALL CONSTRUCTION ACTIVITIES ARE PERFORMED IN ACCORDANCE WITH THE STANDARDS AND POLICIES OF THE OCCUPATIONAL SAFETY AND HEALTH ADMINISTRATION.
8. ALL CONTRACTORS SHALL BE RESPONSIBLE FOR VERIFYING LOCATIONS OF ALL UTILITIES AND COMPLYING WITH THE PENNSYLVANIA ACT 38 AND ACT 187, AS AMENDED.
9. ALL NEW UTILITIES SHALL BE INSTALLED UNDERGROUND.
10. ALL CONTRACTORS WORKING ON THIS PROJECT SHALL COMPLY WITH THE REQUIREMENTS OF P.L. 852, No. 287, 12/10/74, AS AMENDED 12/12/86, P.L. 1574, No. 172. CONTRACTOR MUST NOTIFY PA-1 CALL SYSTEM, INC. 3 DAYS PRIOR TO CONSTRUCTION.
11. CONTRACTOR SHALL NOT ENCROACH ONTO ABUTTING PROPERTIES UNLESS A TEMPORARY CONSTRUCTION EASEMENT HAS BEEN GRANTED BY ADJOINING PROPERTY OWNER. CONTRACTOR SHALL HAVE PROPERTY LINES CLEARLY MARKED IN AREAS WHERE GRADING WILL ENCROACH WITHIN 5 FEET OF THE PROPERTY LINE AND SHALL CONSTRUCT SUCH BARRIERS WHICH ARE NECESSARY TO PREVENT ENCROACHMENT ONTO ADJACENT PROPERTIES.
12. NO EXCAVATION OR FILL SHALL BE MADE WITH A FACE STEEPER THAN 3 HORIZONTAL TO 1 VERTICAL.

GENERAL CONSTRUCTION NOTES

NEW BRITAIN TOWNSHIP, BUCKS COUNTY, PENNSYLVANIA

G&A

GILMORE & ASSOCIATES, INC.
ENGINEERING & CONSULTING SERVICES
65 EAST BUTLER AVENUE, SUITE 100, NEW BRITAIN, PA 18901-5106 • (215) 345-4330
www.gilmore-assoc.com

DATE:	LAST REVISED:	SCALE:	DRAWING No:
5/22/09		N.T.S.	1 OF 17

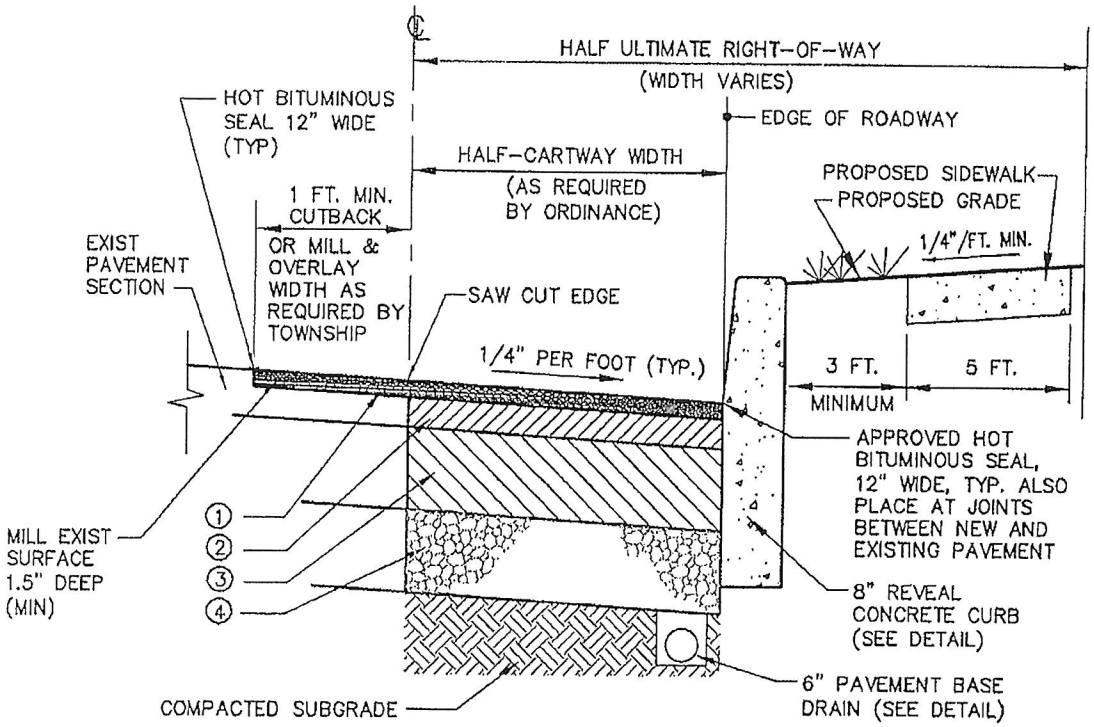

1. 1.5" SUPERPAVE ASPHALT MIXTURE DESIGN, 9.5 mm MIX, PG 64-22, HMA WEARING COURSE, 3.0 TO 30.0 MILLION ESALS, SRL-H
2. 2.0" SUPERPAVE ASPHALT MIXTURE DESIGN, 19 mm MIX, PG 64-22, HMA BINDING COURSE, 3.0 TO 30.0 MILLION ESALS
3. 5" SUPERPAVE ASPHALT MIXTURE DESIGN, 25 mm MIX, PG 64-22, HMA BASE COURSE, 3.0 TO 30.0 MILLION ESALS
4. 6" 3A MODIFIED STONE SUBBASE (MATCH EXISTING IF GREATER)

NOTE: NEW ROADS SHALL COMPLY WITH THE ABOVE SPECIFICATION

TYPICAL ROADWAY WIDENING SECTION DETAIL FOR ARTERIAL, COLLECTOR, AND NON-RESIDENTIAL ROADS

NEW BRITAIN TOWNSHIP, BUCKS COUNTY, PENNSYLVANIA

GILMORE & ASSOCIATES, INC.
ENGINEERING & CONSULTING SERVICES
65 EAST BUTLER AVENUE, SUITE 100, NEW BRITAIN, PA 18901-5106 • (215) 345-4330
www.gilmore-assoc.com

DATE:	LAST REVISED:	SCALE:	DRAWING No:
5/22/09		N.T.S.	2 OF 17

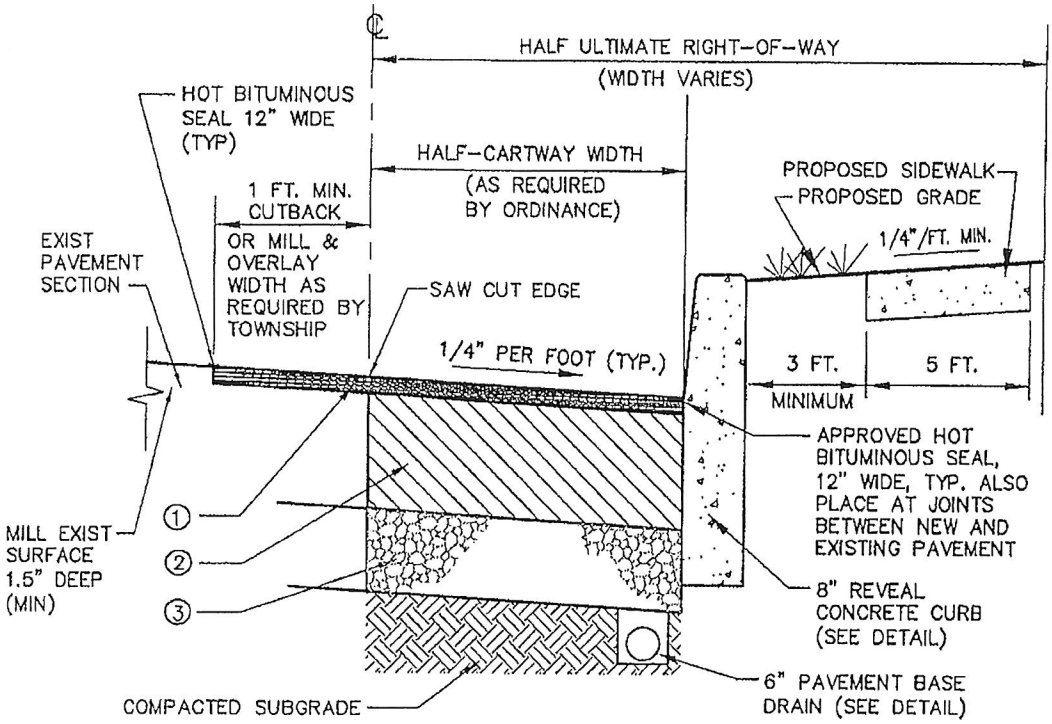

① 1.5" SUPERPAVE ASPHALT MIXTURE DESIGN, 9.5 mm MIX, PG 64-22, HMA WEARING COURSE, 3.0 TO 10.0 MILLION ESALS, SRL-M

② 4.5" SUPERPAVE ASPHALT MIXTURE DESIGN, 25 mm MIX, PG 64-22, HMA BASE COURSE, 3.0 TO 10.0 MILLION ESALS

③ 6" 3A MODIFIED STONE SUBBASE (MATCH EXISTING IF GREATER)

NOTE: NEW ROADS SHALL COMPLY WITH THE ABOVE SPECIFICATION

TYPICAL ROADWAY WIDENING SECTION DETAIL FOR RESIDENTIAL AND LOCAL ROADS

NEW BRITAIN TOWNSHIP, BUCKS COUNTY, PENNSYLVANIA

GILMORE & ASSOCIATES, INC.
ENGINEERING & CONSULTING SERVICES
65 EAST BUTLER AVENUE, SUITE 100, NEW BRITAIN, PA 18901-5106 • (215) 345-4330
www.gilmore-assoc.com

DATE:	LAST REVISED:	SCALE:	DRAWING No:
5/22/09		N.T.S.	3 OF 17

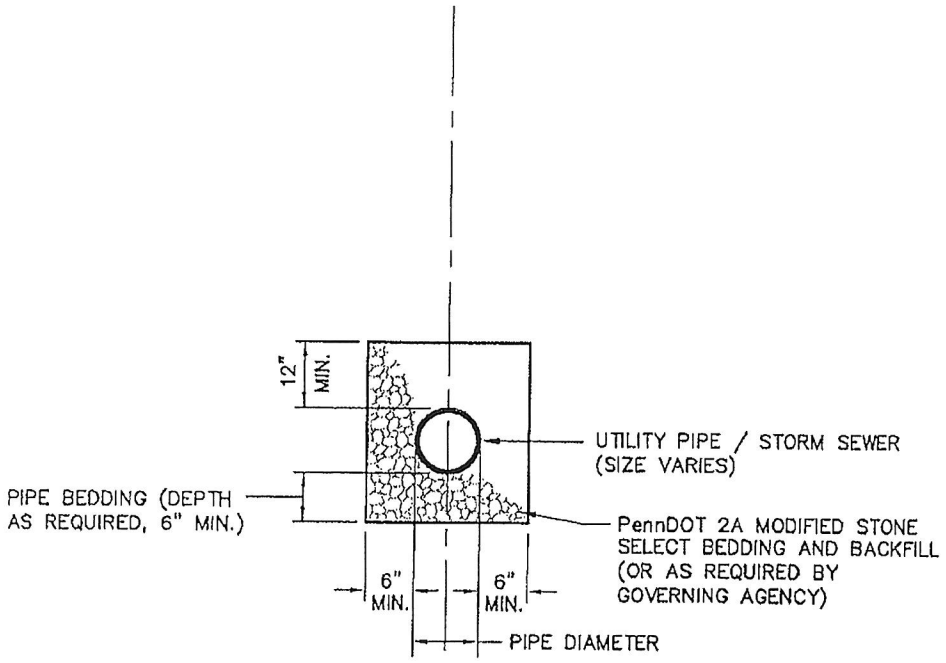

PIPE BEDDING DETAIL

NEW BRITAIN TOWNSHIP, BUCKS COUNTY, PENNSYLVANIA

GILMORE & ASSOCIATES, INC.
ENGINEERING & CONSULTING SERVICES
65 EAST BUTLER AVENUE, SUITE 100, NEW BRITAIN, PA 18901-5106 • (215) 345-4330
www.gilmore-assoc.com

DATE:	LAST REVISED:	SCALE:	DRAWING No:
5/22/09		N.T.S.	4 OF 17

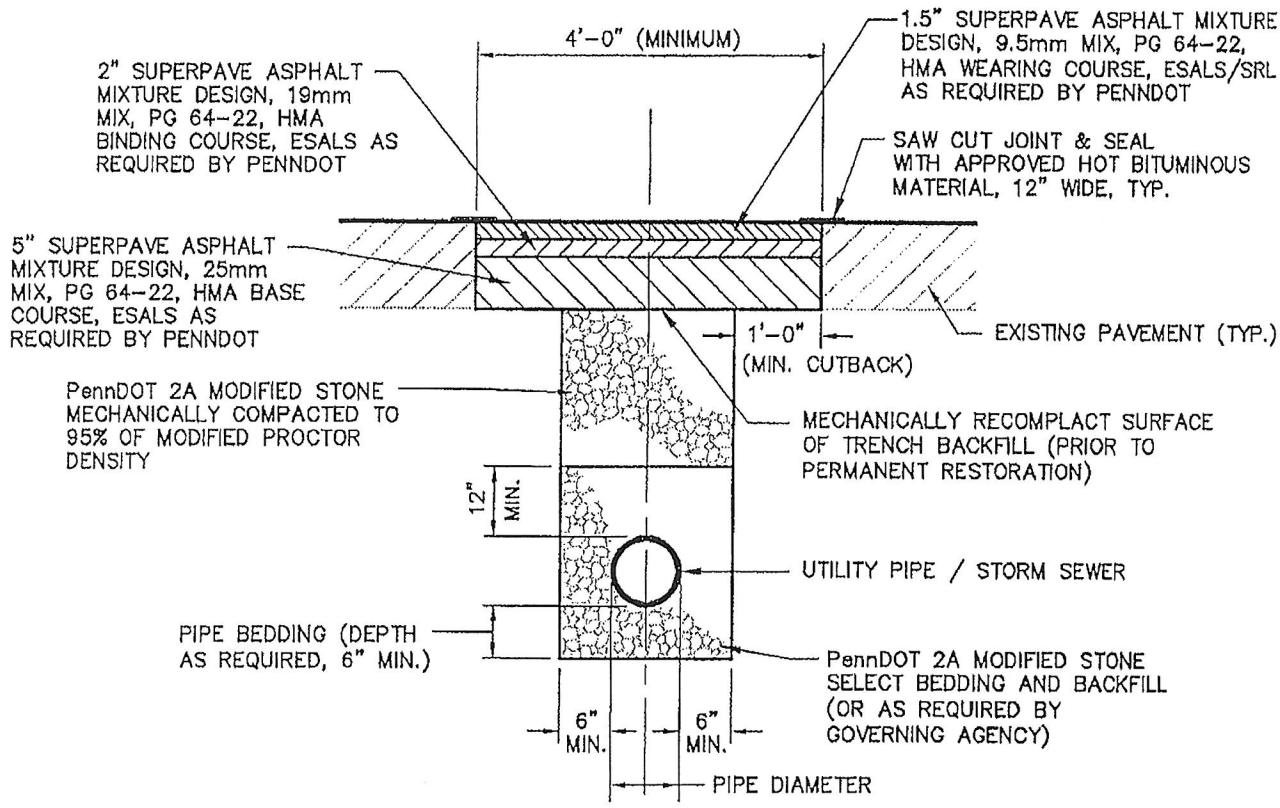

AFTER 90 DAYS RESTORATION

NOTES:

1. BEFORE 90 DAYS, ROADS SHALL BE TEMPORARILY RESTORED WITH 2A COURSE AGGREGATE AND 2" OF PennDOT ID-2 BINDER COURSE (TO GRADE) AND ALLOWED TO SETTLE 90 DAYS PRIOR TO PERMANENT RESTORATION, AS SHOWN ABOVE. PERMANENT RESTORATION OF TRENCHES SHALL BE COMPLETED ONLY AFTER APPROVAL BY TOWNSHIP ENGINEER.
2. RETAINED SUITABLE MATERIAL MAY BE USED AS BACKFILL FOR TRENCHES IN TOWNSHIP RIGHT-OF-WAY (OUTSIDE OF CARTWAY) WHEN MORE THAN THREE (3) FEET FROM EDGE OF EXISTING CARTWAY, CURB, AND/OR SIDEWALK.
3. MINIMUM WIDTH OF ALL RESTORATION SHALL BE FOUR (4) FEET.
4. COLD PATCH SHALL BE APPLIED ON ALL TRENCH RESTORATIONS (PRIOR TO 90 DAYS) WHEN BINDING OR BASE COURSE ARE NOT AVAILABLE DUE TO WEATHER CONDITIONS.
5. FOR PLASTIC UTILITIES, INSTALL DETECTION TAPE OVER PIPE AT TOP OF STONE BACKFILL.

STORM SEWER & UTILITY TRENCH RESTORATION WITHIN PAVED AREAS DETAIL

NEW BRITAIN TOWNSHIP, BUCKS COUNTY, PENNSYLVANIA

GILMORE & ASSOCIATES, INC.
ENGINEERING & CONSULTING SERVICES
65 EAST BUTLER AVENUE, SUITE 100, NEW BRITAIN, PA 18901-5106 • (215) 345-4330
www.gilmore-assoc.com

DATE:	LAST REVISED:	SCALE:	DRAWING No:
5/22/09		N.T.S.	5 OF 17

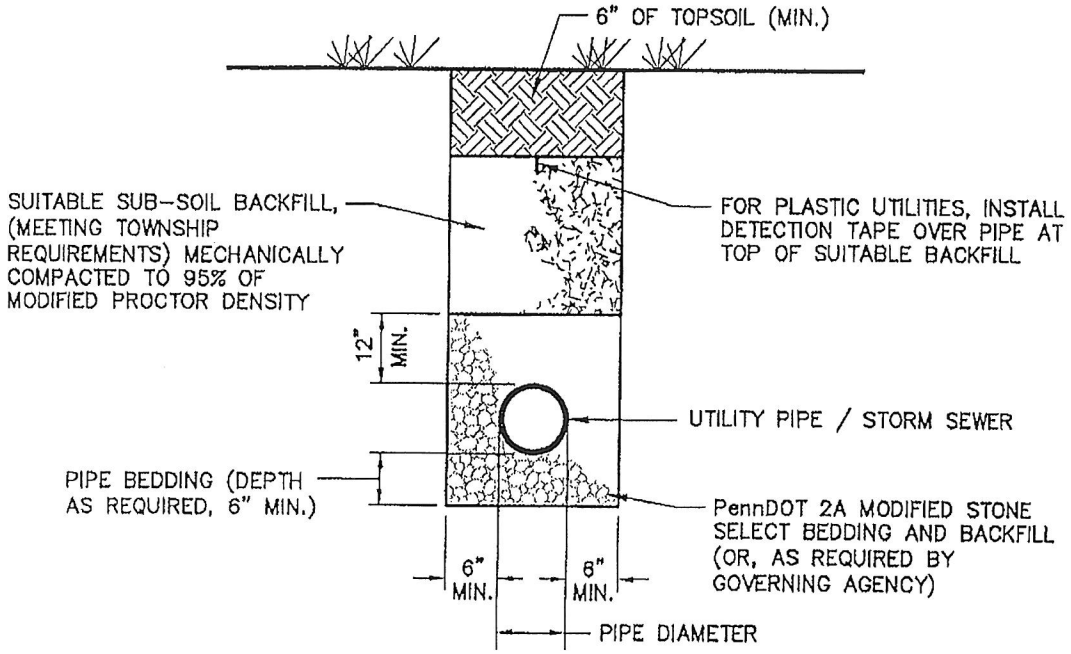

STORM SEWER & UTILITY TRENCH RESTORATION WITHIN PERVIOUS AREAS DETAIL

NEW BRITAIN TOWNSHIP, BUCKS COUNTY, PENNSYLVANIA

GILMORE & ASSOCIATES, INC.
ENGINEERING & CONSULTING SERVICES
65 EAST BUTLER AVENUE, SUITE 100, NEW BRITAIN, PA 18901-5106 • (215) 345-4330
www.gilmore-assoc.com

DATE:	LAST REVISED:	SCALE:	DRAWING No:
5/22/09		N.T.S.	6 OF 17

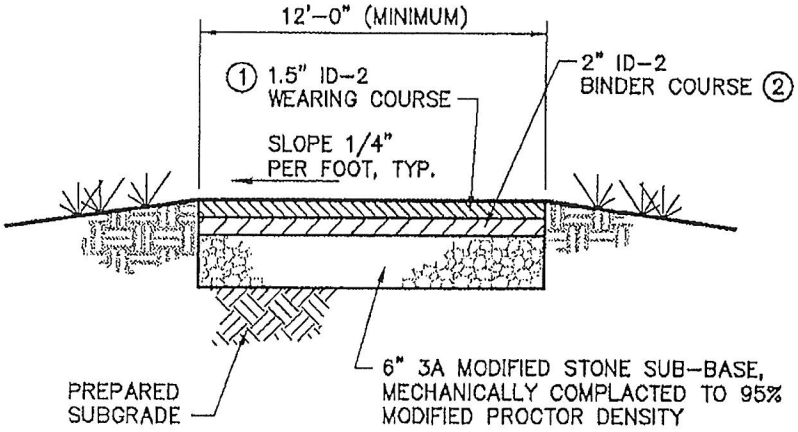

ALTERNATE SPECIFICATION

① 1.5" SUPERPAVE ASPHALT MIXTURE DESIGN, 9.5 mm MIX, PG 64-22, HMA WEARING COURSE, 0.3 TO 3 MILLION ESALS, SRL-M

② 2.0" SUPERPAVE ASPHALT MIXTURE DESIGN, 19mm MIX, PG 64-22, HMA BINDER COURSE, 0.3 TO 3 MILLION ESALS

RESIDENTIAL DRIVEWAY
PAVING SECTION DETAIL

NEW BRITAIN TOWNSHIP, BUCKS COUNTY, PENNSYLVANIA

GILMORE & ASSOCIATES, INC.
ENGINEERING & CONSULTING SERVICES
65 EAST BUTLER AVENUE, SUITE 100, NEW BRITAIN, PA 18901-5106 • (215) 345-4330
www.gilmore-assoc.com

DATE:	LAST REVISED:	SCALE:	DRAWING No:
5/22/09		N.T.S.	7 OF 17

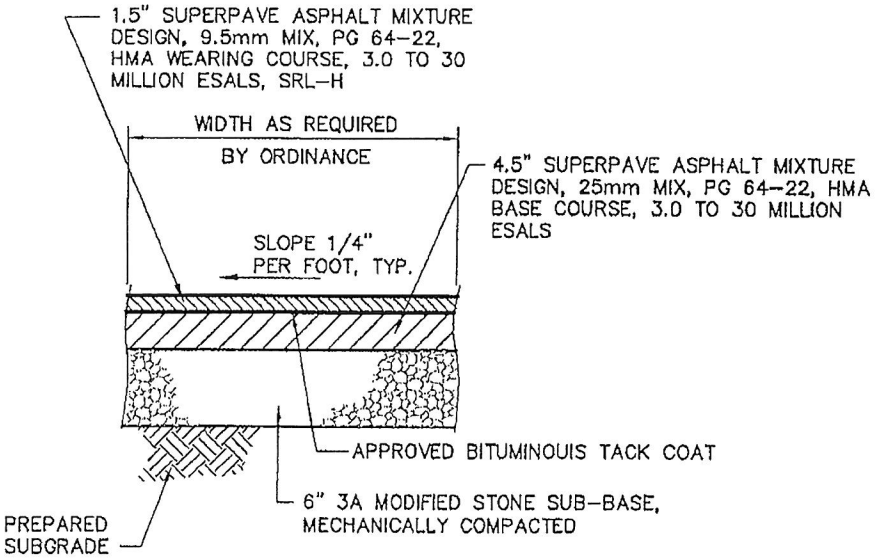

NON–RESIDENTIAL AND MULTI–RESIDENTIAL DRIVEWAYS, PARKING AREAS AND LOADING AREAS PAVING SECTION DETAIL

NEW BRITAIN TOWNSHIP, BUCKS COUNTY, PENNSYLVANIA

GILMORE & ASSOCIATES, INC.

ENGINEERING & CONSULTING SERVICES

65 EAST BUTLER AVENUE, SUITE 100, NEW BRITAIN, PA 18901-5106 • (215) 345-4330

www.gilmore-assoc.com

DATE:	LAST REVISED:	SCALE:	DRAWING No:
5/22/09		N.T.S.	8 OF 17

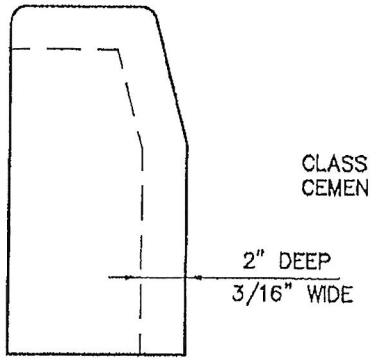

CONTRACTION JOINT

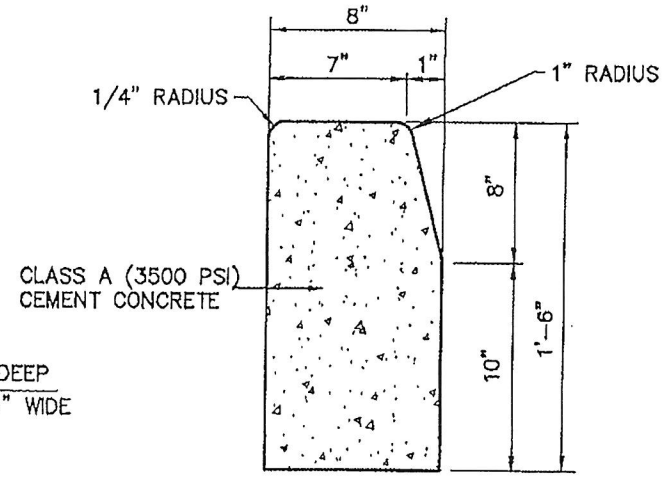

TYPICAL CROSS SECTION

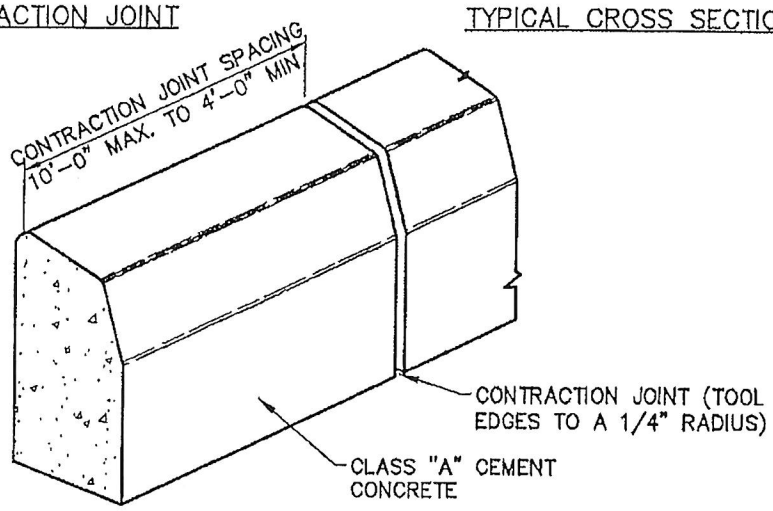

NOTES:

1. PLACE 1/2" PREMOLDED EXPANSION JOINT MATERIAL EVERY 50 FEET (MAX.) AND AT ALL DRIVEWAYS (DEPRESSED CURB CUTS), INLETS, AND CURB RADII.
2. MINIMUM 2-#6 REINFORCING BARS PER SIDE WHERE CURB ABUTS INLET HOODS, INCLUDING PREMOLDED EXPANSION JOINT MATERIAL.
3. WHERE CURB ARE INSTALLED BY A MACHINE, SAW CUTS SHALL BE 2" DEEP, EVERY 10 FEET.

PLAIN CEMENT CONCRETE CURB DETAIL

NEW BRITAIN TOWNSHIP, BUCKS COUNTY, PENNSYLVANIA

GILMORE & ASSOCIATES, INC.
ENGINEERING & CONSULTING SERVICES
65 EAST BUTLER AVENUE, SUITE 100, NEW BRITAIN, PA 18901-5106 • (215) 345-4330
www.gilmore-assoc.com

DATE:	LAST REVISED:	SCALE:	DRAWING No:
5/22/09		N.T.S.	9 OF 17

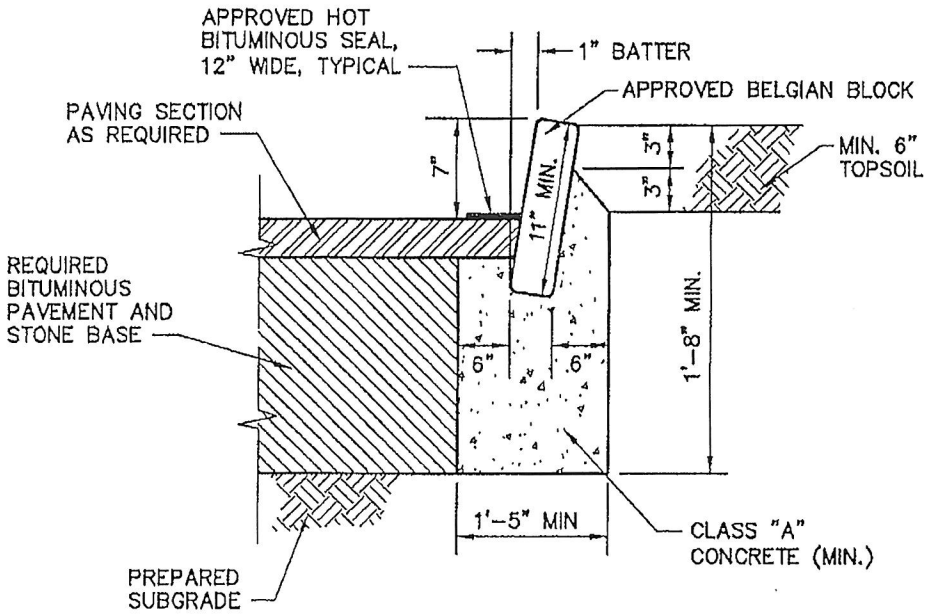

NOTES:

1. TO BE USED ONLY WHERE APPROVED BY TOWNSHIP.
2. TYPE AND COLOR OF BELGIAN BLOCKS SHALL BE UNIFORM. THE TOWNSHIP MAY REJECT ANY BLOCK PRIOR TO DEDICATION OF STREET.
3. INDIVIDUAL BLOCKS CONSISTING OF 5% OF TOTAL LINEAR CURB FOOTAGE SHALL BE DELIVERED TO THE TOWNSHIP'S PUBLIC WORKS FACILITY, AND STORED AT A LOCATION APPROVED BY THE PUBLIC WORKS DIRECTOR.

BELGIAN BLOCK CURB DETAIL

NEW BRITAIN TOWNSHIP, BUCKS COUNTY, PENNSYLVANIA

GILMORE & ASSOCIATES, INC.
ENGINEERING & CONSULTING SERVICES
65 EAST BUTLER AVENUE, SUITE 100, NEW BRITAIN, PA 18901-5108 • (215) 345-4330
www.gilmore-assoc.com

DATE:	LAST REVISED:	SCALE:	DRAWING No:
5/22/09		N.T.S.	10 OF 17

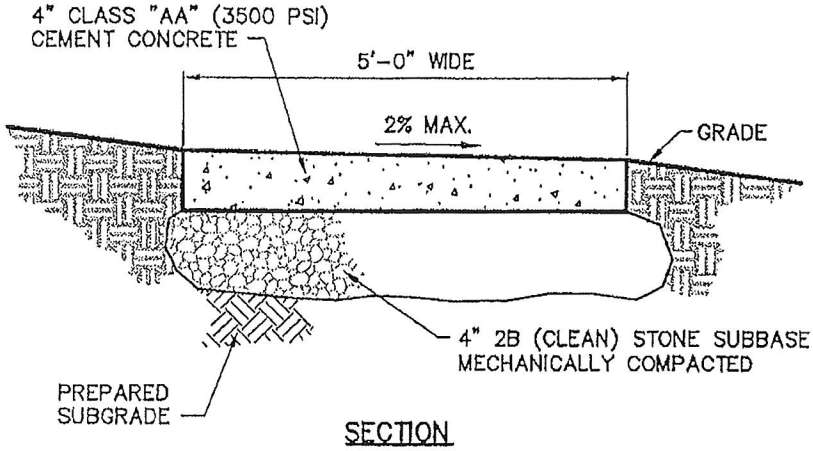

SECTION

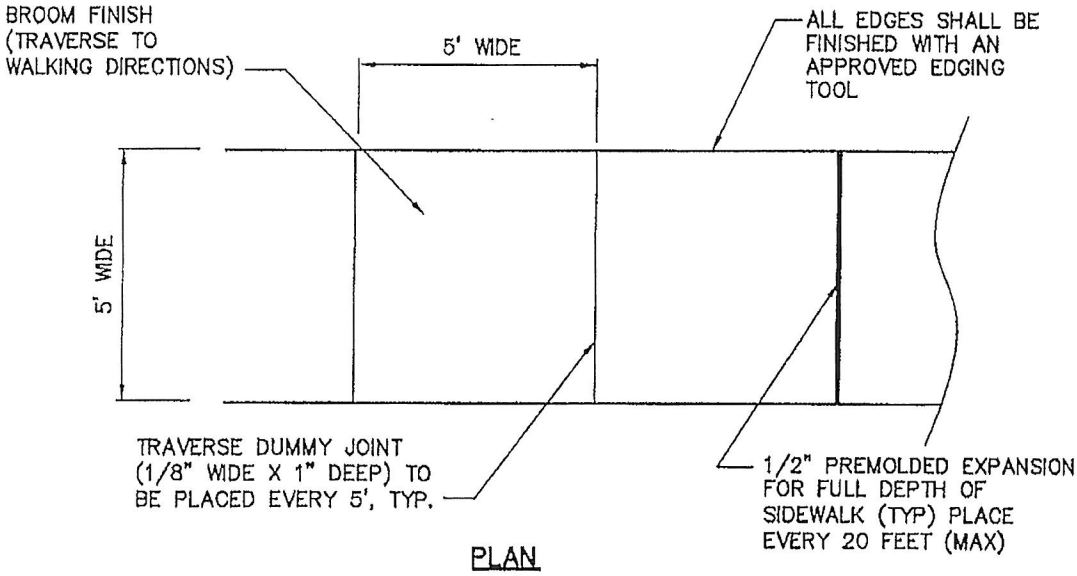

PLAN

NOTES:

1. WITH ALL PROPOSED SIDEWALK, A NON-SLIP SURFACE TEXTURE SHALL BE BROOMED TRAVERSE TO THE SLOPE OF THE SIDEWALK.
2. ALL SIDEWALK SHALL BE IN ACCORDANCE WITH ACI & PENNDOT STANDARDS.

CONCRETE SIDEWALK DETAIL

NEW BRITAIN TOWNSHIP, BUCKS COUNTY, PENNSYLVANIA

GILMORE & ASSOCIATES, INC.
ENGINEERING & CONSULTING SERVICES
65 EAST BUTLER AVENUE, SUITE 100, NEW BRITAIN, PA 18901-5108 • (215) 345-4330
www.gilmore-assoc.com

DATE:	LAST REVISED:	SCALE:	DRAWING No:
5/22/09		N.T.S.	11 OF 17

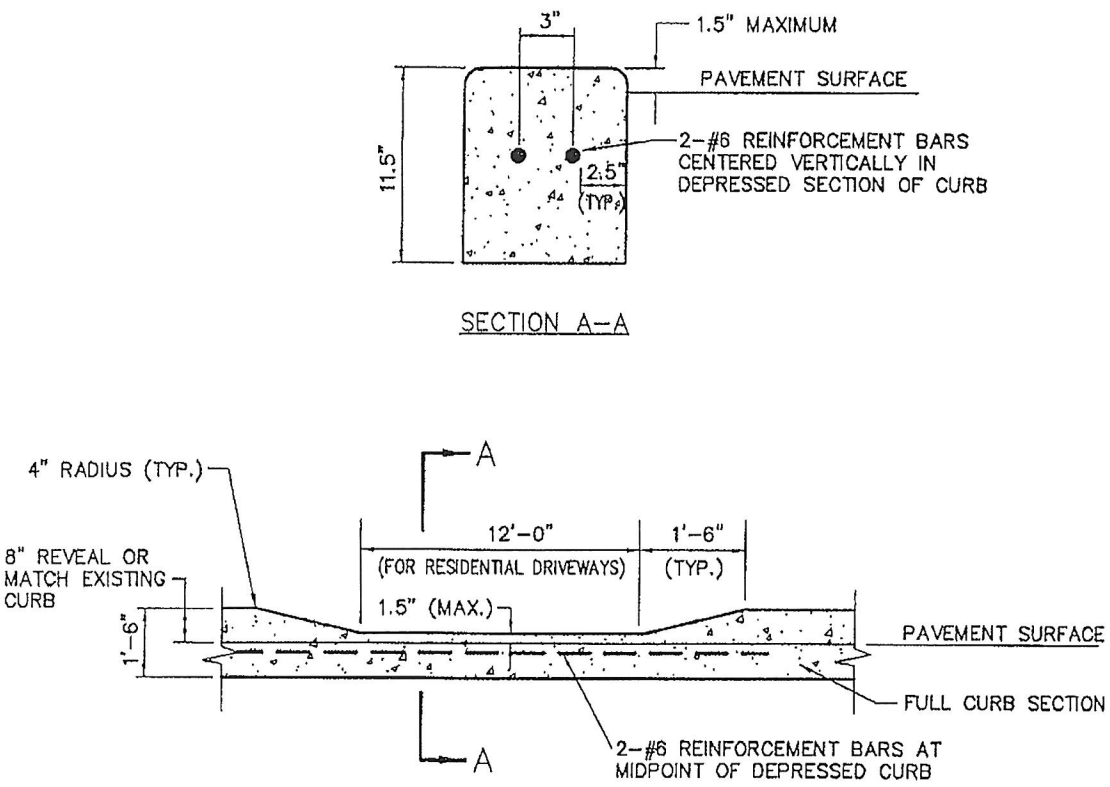

DEPRESSED CURB DETAIL

NEW BRITAIN TOWNSHIP, BUCKS COUNTY, PENNSYLVANIA

GILMORE & ASSOCIATES, INC.
ENGINEERING & CONSULTING SERVICES
65 EAST BUTLER AVENUE, SUITE 100, NEW BRITAIN, PA 18901-5106 • (215) 345-4330
www.gilmore-assoc.com

DATE:	LAST REVISED:	SCALE:	DRAWING No:
5/22/09		N.T.S.	12 OF 17

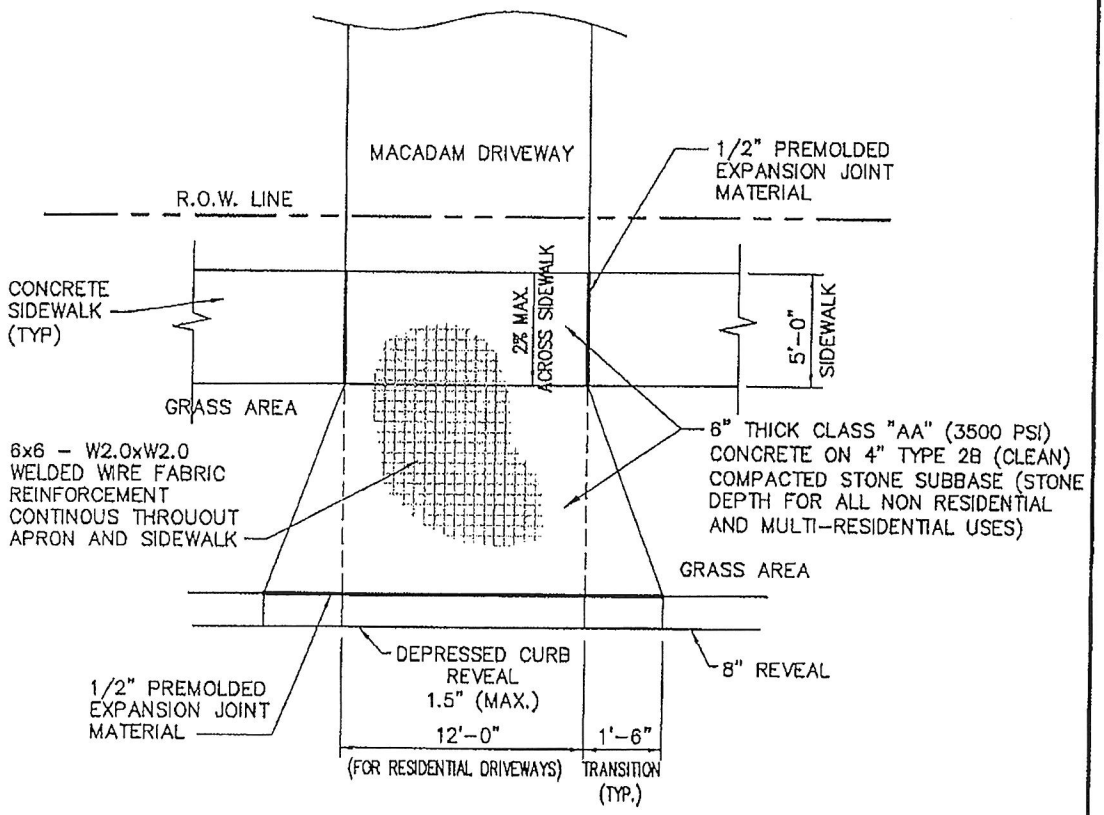

DRIVEWAY AND APRON DETAIL

NEW BRITAIN TOWNSHIP, BUCKS COUNTY, PENNSYLVANIA

GILMORE & ASSOCIATES, INC.
ENGINEERING & CONSULTING SERVICES
65 EAST BUTLER AVENUE, SUITE 100, NEW BRITAIN, PA 18901-5106 • (215) 345-4330
www.gilmore-assoc.com

DATE:	LAST REVISED:	SCALE:	DRAWING No:
5/22/09		N.T.S.	13 OF 17

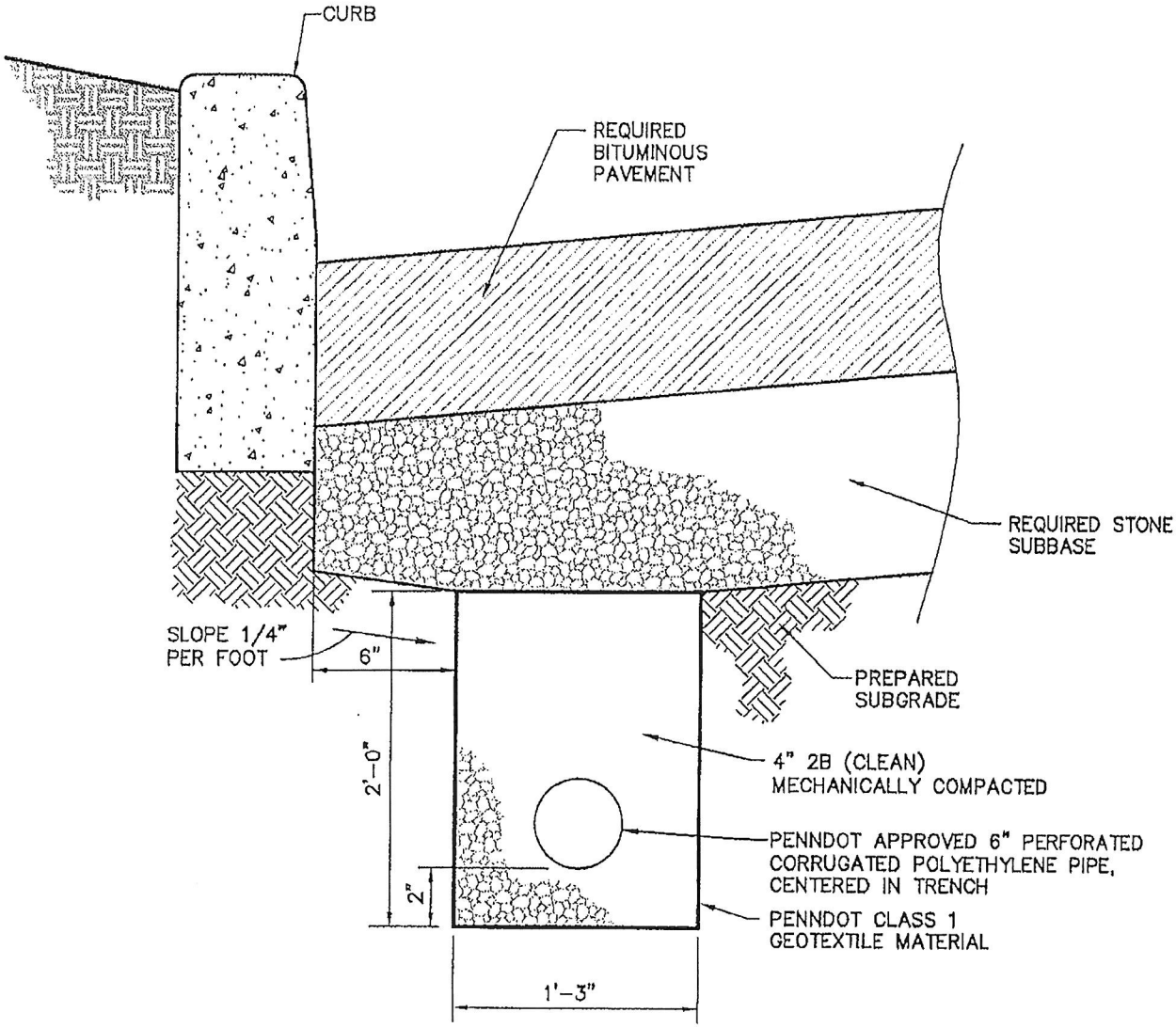

ROAD UNDERDRAIN DETAIL

NEW BRITAIN TOWNSHIP, BUCKS COUNTY, PENNSYLVANIA

GILMORE & ASSOCIATES, INC.
ENGINEERING & CONSULTING SERVICES
65 EAST BUTLER AVENUE, SUITE 100, NEW BRITAIN, PA 18901-5108 • (215) 345-4330
www.gilmore-assoc.com

DATE:	LAST REVISED:	SCALE:	DRAWING No:
5/22/09		N.T.S.	14 OF 17

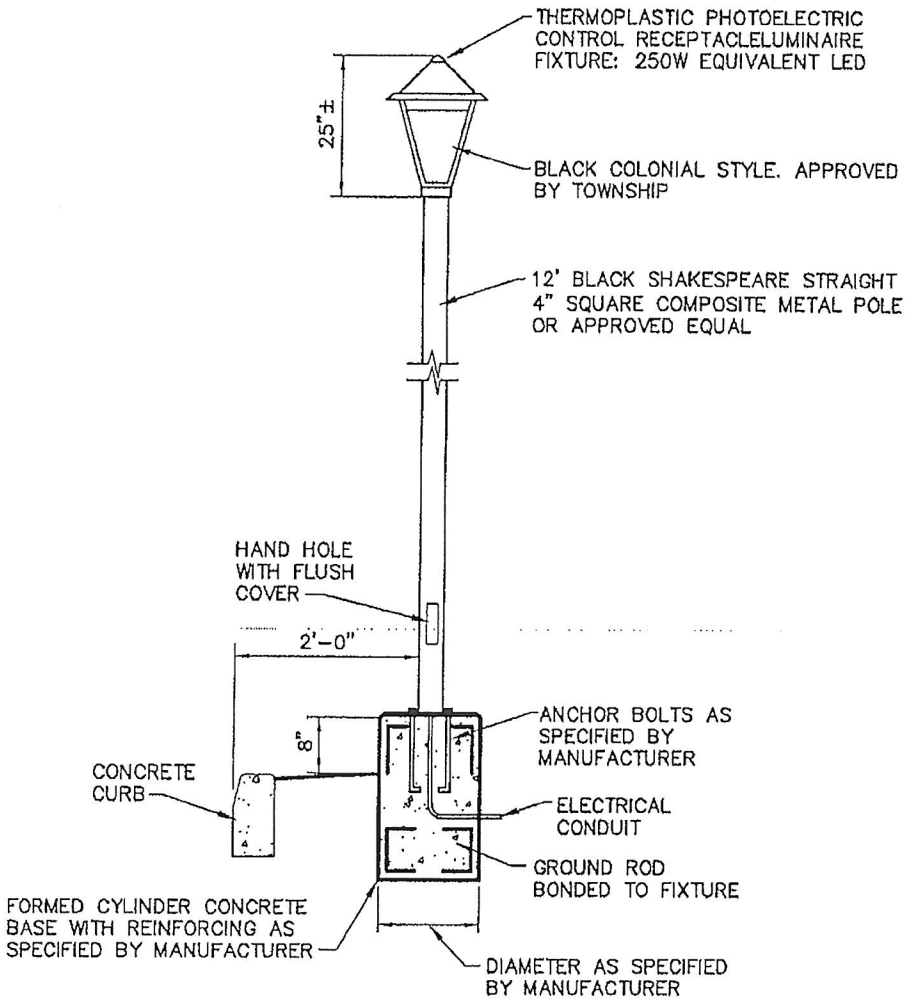

STREET LIGHT DETAIL

NEW BRITAIN TOWNSHIP, BUCKS COUNTY, PENNSYLVANIA

GILMORE & ASSOCIATES, INC.
ENGINEERING & CONSULTING SERVICES
65 EAST BUTLER AVENUE, SUITE 100, NEW BRITAIN, PA 18901-5106 • (215) 345-4330
www.gilmore-assoc.com

DATE:	LAST REVISED:	SCALE:	DRAWING No:
5/22/09		N.T.S.	15 OF 17

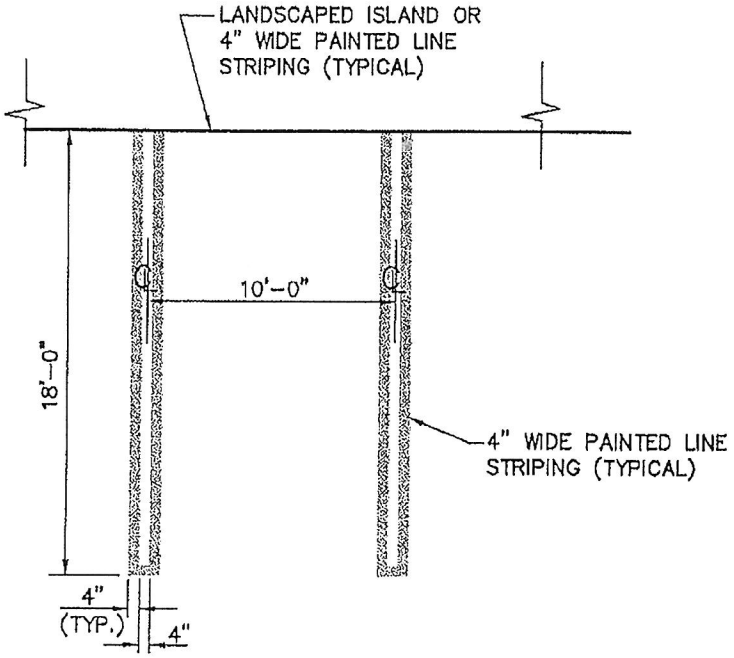

PARKING SPACE STRIPING DETAIL

NEW BRITAIN TOWNSHIP, BUCKS COUNTY, PENNSYLVANIA

GILMORE & ASSOCIATES, INC.
ENGINEERING & CONSULTING SERVICES
65 EAST BUTLER AVENUE, SUITE 100, NEW BRITAIN, PA 18901-5106 • (215) 345-4330
www.gilmore-assoc.com

DATE:	LAST REVISED:	SCALE:	DRAWING No:
5/22/09		N.T.S.	16 OF 17

NOTES:

1. STREET NAME SIGNS SHALL BE OF HIGH INTENSITY PRISMATIC MATERIAL (HIP) MEETING MINIMUM ASTM TYPE III RETRO-REFLECTIVE STANDARDS; NO ENGINEER GRADE SIGNS SHALL BE ACCEPTED.

2. STREET SIGNS TO BE 9" EXTRUDED ALUMINUM SHEETED GREEN BACKGROUND WITH WHITE 6" HIP "SERIES B" LEGEND.

3. STREET NAME SIGN POST SHALL BE ALUMINUM, 2 3/8" DIAMETER, 10' LONG, AND BE CEMENTED IN A 5 GALLON BUCKET AND BURIED SO THAT 8' REMAINS ABOVE FINISHED GRADE.

4. STREET NAME SIGN HARDWARE: ALL BRACKETS SHALL BE 12" LONG GS 12 BOLT THROUGH FOR EXTRUDED SIGNS AND SHALL BE FITTED ON A 2-3/8" DIAMETER POST.

5. LOCATION OF SIGN MUST NOT OBSCURE ANY POTENTIAL TRAFFIC HAZARD. AT ANY LOCATION WHERE THE TYPICAL PLACEMENT OF A SIGN INTERFERES WITH A SAFE SIGHT DISTANCE, AN ALTERNATIVE LOCATION MUST BE FOUND. THE LOWER EDGE OF THE PLATES SHALL BE 8 FEET ABOVE THE GROUND LEVEL OR CURB. THE PLATES SHALL BE ATTACHED TO THE STANDARD BY RUST-PROOF METAL FASTENERS.

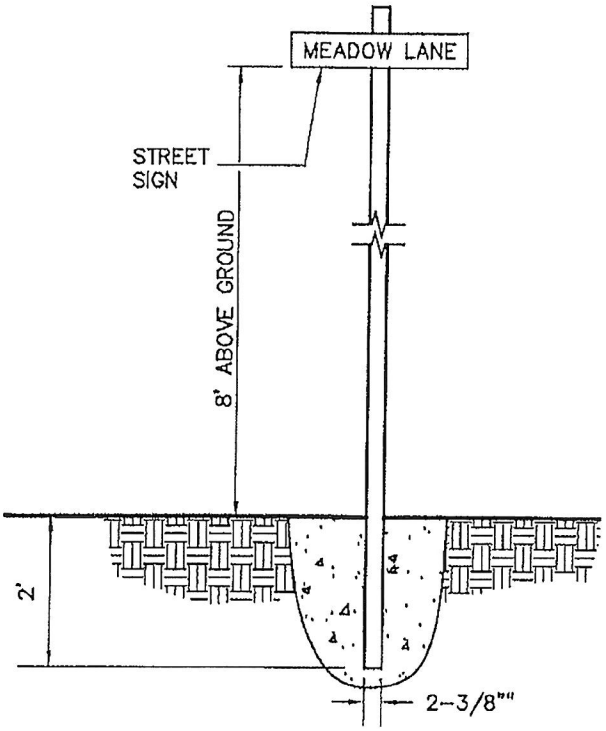

STREET SIGN DETAIL

NEW BRITAIN TOWNSHIP, BUCKS COUNTY, PENNSYLVANIA

GILMORE & ASSOCIATES, INC.
ENGINEERING & CONSULTING SERVICES
65 EAST BUTLER AVENUE, SUITE 100, NEW BRITAIN, PA 18901-5106 • (215) 345-4330
www.gilmore-assoc.com

DATE:	LAST REVISED:	SCALE:	DRAWING No:
5/22/09		N.T.S.	17 OF 17